MIAMI-DADE COUNTY
PRODUCT CONTROL SECTION
11805 SW 26 Street, Room 208
Miami, Florida 33175-2474
T (786) 315-2590 F (786) 315-2599
www.miamidade.gov/economy

DEPARTMENT OF REGULATORY AND ECONOMIC RESOURCES (RER)
BOARD AND CODE ADMINISTRATION DIVISION

NOTICE OF ACCEPTANCE (NOA)

CGI WINDOWS and DOORS, INC.
3780 W. 104th Street
Hialeah, FL 33018

SCOPE:

This NOA is being issued under the applicable rules and regulations governing the use of construction materials. The documentation submitted has been reviewed and accepted by Miami-Dade County RER -Product Control Section to be used in Miami Dade County and other areas where allowed by the Authority Having Jurisdiction (AHJ).

This NOA shall not be valid after the expiration date stated below. The Miami-Dade County Product Control Section (In Miami Dade County) and/or the AHJ (in areas other than Miami Dade County) reserve the right to have this product or material tested for quality assurance purposes. If this product or material fails to perform in the accepted manner, the manufacturer will incur the expense of such testing and the AHJ may immediately revoke, modify, or suspend the use of such product or material within their jurisdiction. RER reserves the right to revoke this acceptance, if it is determined by Miami-Dade County Product Control Section that this product or material fails to meet the requirements of the applicable building code.

This product is approved as described herein and has been designed to comply with the Florida Building Code, including the High Velocity Hurricane Zone.

DESCRIPTION: Series "Sentinel 150" Aluminum Sliding Glass Door w/ wo Reinforcements – L.M.I.

APPROVAL DOCUMENT: Drawing No. **SGD150LMI-NOA Rev A** (former **SGD150LMI-NOA Rev O**), titled Series "150 Sentinel Aluminum Sliding Glass Door", sheets 1 through 28 of 28, prepared by manufacturer, dated 07/21/20, signed and sealed by Lyn Miller, P. E., bearing the Miami–Dade County Product Control Revision stamp with the Notice of Acceptance number and Revision date by the Miami–Dade County Product Control Section.

MISSILE IMPACT RATING: Large and Small Missile Impact Resistant

Limitations:

1. Pocket wall is not part of this approval and to be reviewed by AHJ.
2. See Design Pressure (DP) table: Sizes Vs glass types, Interlock reinforcing & sill riser and the max allowable panels for the entire unit, in sheet **13**. See anchor clusters DP capacity in sheet **15**. Lower capacity shall control for the entire assembly. For Doors w/ corners, see limitation note 4, below.
3. Max shim not to exceed ½" at Head/jambs & ½" at Sill (w/ High strength poured & hardened grout). The Sill to be installed w/ anchor type **B-2,** directly into conc.
4. Units containing 90^0 & 135^0 exterior corners must be limited to Max Dp= **+/-60 PSF**. See sheet **22** for anchor layout.

LABELING: Each unit shall bear a permanent label with the manufacturer's name or logo, city, state and series and following statement: "Miami-Dade County Product Control Approved", noted herein.

RENEWAL of this NOA shall be considered after a renewal application has been filed and there has been no change in the applicable building code negatively affecting the performance of this product.

TERMINATION of this NOA will occur after the expiration date or if there has been a revision or change in the materials, use, and/or manufacture of the product or process. Misuse of this NOA as an endorsement of any product, for sales, advertising or any other purposes shall automatically terminate this NOA. Failure to comply with any section of this NOA shall be cause for termination and removal of NOA.

ADVERTISEMENT: The NOA number preceded by the words Miami-Dade County, Florida, and followed by the expiration date may be displayed in advertising literature. If any portion of the NOA is displayed, then it shall be done in its entirety.

INSPECTION: A copy of this entire NOA shall be provided to the user by the manufacturer or its distributors and shall be available for inspection at the job site at the request of the Building Official.

This NOA **revises & renews NOA # 19-0603.03** and consists of this page 1 and evidence pages E-1, E-2, E-3 & E-4, E-5 and E-6, as well as approval document mentioned above.

The submitted documentation was reviewed by **Ishaq I. Chanda, P.E.**

MIAMI-DADE COUNTY APPROVED

Ishaq I. Chanda

NOA No. 20-0729.06
Expiration Date: September 22, 2025
Approval Date: September 10, 2020

CGI WINDOWS and DOORS, INC.

NOTICE OF ACCEPTANCE: EVIDENCE SUBMITTED

1. Evidence submitted under previous approvals

A. DRAWINGS

1. Manufacturer's die drawings and sections.
2. Drawing No. **W10–31 Rev L**, titled Series "Sentinel 150 Alum Sliding Glass Door", sheets 1 through 28 of 28, prepared by Al–Farooq Corporation, dated 05/20/10 and last revised on 01/11/16, signed and sealed by Javad Ahmad, P. E.

B. TESTS

1. Test reports on:
   1) Air Infiltration Test, per FBC, TAS 202–94
   2) Uniform Static Air Pressure Test, Loading per FBC TAS 202–94
   3) Water Resistance Test, per FBC, TAS 202–94
   4) Small Missile Impact Test per FBC, TAS 201–94
   5) Cyclic Wind Pressure Loading per FBC, TAS 203–94
   6) Forced Entry Test, per FBC, TAS 202–94

   along with marked–up drawings and installation diagram of 8-panel, Alum SGD w/ Pockets & 135° and 90° corners, prepared by Architectural Testing, Inc., Test Report No. **D8502.01-450-18**, dated 12/07/15 respectively, both signed and sealed by Joseph A. Reed, P.E.(submitted under file #15-0619.06)
2. Test reports on:
   1) Air Infiltration Test, per FBC, TAS 202-94
   2) Uniform Static Air Pressure Test, Loading per FBC TAS 202-94
   3) Water Resistance Test, per FBC, TAS 202-94
   4) Large Missile Impact Test per FBC, TAS 201-94
   5) Cyclic Wind Pressure Loading per FBC, TAS 203-94
   6) Forced Entry Test, per FBC 2411 3.2.1, TAS 202-94

   along with marked–up drawings and installation diagram of 6-panels Alum SGD w/ Pockets & OXXX, prepared by Certified Testing Laboratories, Test Report No. **CTLA -3011-W** & **-W-1**, dated May 22 & 23, 2014 respectively, both signed and sealed by Ramesh Patel, P. E.
   (Note this test reports have been revised by an addendum letter dated SEP 24, 2014, issued by Certified Testing lab.)
3. Test reports on:
   1) Uniform Static Air Pressure Test, Loading per FBC TAS 202-94
   2) Large Missile Impact Test per FBC, TAS 201-94
   3) Cyclic Wind Pressure Loading per FBC, TAS 203-94

   along with marked–up drawings and installation diagram of a series 7500FW Vinyl Flange Frame Impact Fixed Window, to qualify DuPont "Butacite" PVB interlayer, Duraseal® and Super Spacer® insulating glass spacer, prepared by Certified Testing Laboratories, Test Report No. **CTLA-3056 WA** dated 03/03/15, signed and sealed by Ramesh Patel, P. E.

   along with marked–up drawings and installation diagram of a series 7400PO Vinyl Impact Flange Frame Project Out Windows, to qualify DuPont "Butacite" PVB interlayer, Duraseal® and Super Spacer® insulating glass spacer, prepared by Certified Testing Laboratories, Test Report No. **CTLA-3056 WB** dated 03/03/15, signed and sealed by Ramesh Patel, P. E.

   along with marked–up drawings and installation diagram of a series 238 Aluminum Fixed Flange Frame Window with Vent to qualify DuPont "Butacite" PVB interlayer, Duraseal® and Super Spacer® insulating glass spacer, prepared by Certified Testing Laboratories, Test Report No. **CTLA-3056 WC** dated 04/16/15 and revised on 03/09/16, signed & sealed by Ramesh Patel, P. E.

— Ishaq I. Chanda

Ishaq I. Chanda, P.E.
Product Control Unit Supervisor
NOA No. 20-0729.06
Expiration Date: September 22, 2025
Approval Date: September 10, 2020

NOTICE OF ACCEPTANCE: EVIDENCE SUBMITTED

B. TESTS (continue**)**

4. Test reports on: 1) Air Infiltration Test, per FBC, TAS 202-94
   2) Uniform Static Air Pressure Test, Loading per FBC TAS 202-94
   3) Water Resistance Test, per FBC, TAS 202-94
   4) Large Missile Impact Test per FBC, TAS 201-94
   5) Cyclic Wind Pressure Loading per FBC, TAS 203-94
   6) Forced Entry Test, per FBC 2411 3.2.1, TAS 202-94

along with marked–up drawings and installation diagram of Alum SGD, prepared by Hurricane test Laboratory, LLC, Test Report No. **HTL–0080–1208–090**, dated July 30, 2010, signed and sealed by Vinu J. Abraham, P. E. (submitted under files #12-0119.04/11-1031.05)
along with marked–up drawings and installation diagram of Alum. SGD (OX) prepared by Architectural Testing, Inc., Test Report No. **ATI–C0733.03–450–18**, dated 08/09/12, signed and sealed by Vinu J. Abraham, P. E. (submitted under files #13-1121.08 /#12-0821.16).

C. CALCULATIONS

1. Anchor verification calculations and structural analysis, conformance to, complying with **FBC–2010** and with **FBC 5th Edition (2014)**, prepared by Al–Farooq Corporation, dated 02/24/16, signed and sealed by Javad Ahmad, P.E.
2. Glazing complies with **ASTM E1300- 09.**

D. QUALITY ASSURANCE

1. Miami Dade Department of Regulatory and Economic Resources (RER).

E. MATERIAL CERTIFICATIONS

1. Notice of Acceptance No. **14-0916.11** issued to Kuraray America, Inc. for their "**Sentry Glas® (Clear and White) Glass Interlayers**", expiring on 07/04/18.
2. Notice of Acceptance No. **14-0423.15** issued Eastman Chemical Company (MA) for their "**Saflex CP-Saflex and Saflex HP Composites Interlayer w/ PET core**", expiring on 2/11/18.
3. Notice of Acceptance No. **15-1201.11** issued Eastman Chemical Company (MA) "**Saflex Clear and colored glass interlayer**", expiring on 05/21/21.
4. Notice of Acceptance No. **14-0916.10** issued to Kuraray America, Inc. for their "**Butacite® PVB Glass Interlayer**", expiring 12/11/16.

F. STATEMENTS

1. Statement letter of conformance to, complying with **FBC 5th Edition (2014)**, and of no financial interest, dated 02/24/16, signed and sealed by Javad Ahmad, P. E.
2. Addendum letter dated SEP 24, 2014, issued by Certified Testing lab, signed and sealed by Ramesh Patel, P. E.
3. Lab Compliance statement, part of above referenced test report.

Ishaq I. Chanda

Ishaq I. Chanda, P.E.
Product Control Unit Supervisor
NOA No. 20-0729.06
Expiration Date: September 22, 2025
Approval Date: September 10, 2020

NOTICE OF ACCEPTANCE: EVIDENCE SUBMITTED

G. OTHER

1. This NOA **revises** NOA **# 15-0619.06**, expiring on Sep. 22, 2020.
2. Test proposal for the qualification of **Butacite**® PVB glass interlayer by Kuraray America, Inc., as well as **Duraseal**® and **Super Spacer® Standard** warm-edge flexible insulating glass spacers, dated December 16, 2014, issued by RER, Product Control Section, signed by Jaime Gascon, P.E.
3. Test proposal # **14-0198**, approved on 02/26/2014, signed by Ishaq I. Chanda, P.E.
4. Test proposals # **13-1098**, approved on Oct 02, 2013 and revised on FEB 24, 2014, signed by Manuel Perez, P.E., test proposal # **11-1225** dated DEC 16, 2011 signed by Jaime D. Gascon, P.E. Test proposal # **09–1073**, approved on Nov. 05, 2009 and E-mail test proposal dated 07-19-2010, approved by BCCO.

2. Evidence submitted under previous approval.

A. DRAWINGS

1. Drawing No. **W10–31 Rev O**, titled Series "150 Sentinel Aluminum Sliding Glass Door", sheets 1 through 28 of 28, prepared by Al–Farooq Corporation, dated 05/20/10 and last revised on MAR 05, 2018, signed and sealed by Javad Ahmad, P. E.

B. TESTS

1. None.

C. CALCULATIONS

1. None.

D. QUALITY ASSURANCE

1. Miami Dade Department of Regulatory and Economic Resources (RER).

E. MATERIAL CERTIFICATIONS

1. None.

F. STATEMENTS

1. Letter of conformance to FBC 2017 (6th edition) and No Financial interest, prepared by Al–Farooq Corporation, dated 09/14/17, signed and sealed by Javad Ahmad, P. E.

G. OTHER

1. This NOA **revises NOA # 17-1011.18**, expiring 09/22/2020.

3. Evidence submitted under previous approval

A. DRAWINGS

1. Drawing No. **SGD150LMI-NOA Rev O** (former **W10–31 Rev O**), titled Series "150 Sentinel Aluminum Sliding Glass Door", sheets 1 through 28 of 28, prepared by manufacturer, dated 05/22/19, signed and sealed on 05/23/19 by Lyn Miller, P. E.
   (Note: This revision consists of Successor Engineer adopting another Engineer work as his own and addition of Dow 983 silicone)

Ishaq I. Chanda

Ishaq I. Chanda, P.E.
Product Control Unit Supervisor
NOA No. 20-0729.06
Expiration Date: September 22, 2025
Approval Date: September 10, 2020

NOTICE OF ACCEPTANCE: EVIDENCE SUBMITTED

B. TESTS

1. REF Test reports on: 1) Uniform Static Air Pressure Test, Loading per FBC TAS 202–94
   2) Large Missile Impact Test per FBC, TAS 201–94
   3) Cyclic Wind Pressure Loading per FBC, TAS 203–94

along with marked–up drawings of an aluminum SGD, prepared by Fenestration Testing Laboratory, Inc., Test Report No. **FTL 19-936**, dated 04/15/19, signed and sealed by Idalmis Ortega, P. E.

C. CALCULATIONS (submitted under **file # 17-1011.18)**

1. None.

D. QUALITY ASSURANCE

1. Miami Dade Department of Regulatory and Economic Resources (RER).

E. MATERIAL CERTIFICATIONS

1. Notice of Acceptance No. **17-0808.02** issued to Kuraray America, Inc. (former E.I. DuPont DE Nemours & Co., Inc.) for their "**Sentry Glas® (Clear and White) Glass Interlayers**", expiring on 07/04/23.
2. Notice of Acceptance No. **18-0103.01** issued Eastman Chemical Company (MA) (Former Solutia Inc.) for their "**Saflex CP-Saflex and Saflex HP Composites Interlayer w/ PET core**", expiring on 12/11/23.
3. Notice of Acceptance No. **15-1201.11** issued Eastman Chemical Company (MA) (Former Solutia Inc.) "**Saflex Clear and colored glass interlayer**", expiring on 05/21/21.
4. Notice of Acceptance No. **19-0305.02** issued to Kuraray America, Inc. (former E.I. DuPont De Nemours & Co., Inc.) for their "**Trofosil® Ultra Clear, clear & color PVB Glass Interlayer**", expiring 07/08/24.

F. STATEMENTS

1. Statement letter of conformance, complying with **FBC 6th Edition (2017)**, dated May 23, 2019, issued by manufacturer, signed and sealed by A. Lynn Miller, P.E.
2. Statement letter of no financial interest, dated May 23, 2019, issued by manufacturer, signed and sealed by A. Lynn Miller, P.E.
3. Test Proposal No. **19-0219** issued by the Product Control Section, dated March 13, 2019, signed by Ishaq Chanda, P.E.
4. Notification of Successor Engineer for manufacturer's NOA document per **Section 61G15-27.001** of the **Florida Administrative Code**, notifying original engineer that the successor engineer is assuming full professional and legal responsibility for all engineering documents pertaining to this NOA, dated May 22, 2019, signed and sealed by A. Lynn Miller, P.E.

G. OTHER

1. This NOA **revises NOA # 17-1218.20**, expiring 09/22/2020.

Ishaq I. Chanda

Ishaq I. Chanda, P.E.
Product Control Unit Supervisor
NOA No. 20-0729.06
Expiration Date: September 22, 2025
Approval Date: September 10, 2020

NOTICE OF ACCEPTANCE: EVIDENCE SUBMITTED

5. New Evidence submitted

A. **DRAWINGS**

1. Drawing No. **SGD150LMI-NOA Rev A** (former **SGD150LMI-NOA Rev O**), titled Series "150 Sentinel Aluminum Sliding Glass Door", sheets 1 through 28 of 28, prepared by manufacturer, dated 07/21/20, signed and sealed by Lyn Miller, P. E.

B. TESTS

1. Test reports on: 1) Air Infiltration Test, per FBC, TAS 202-94
2) Uniform Static Air Pressure Test, Loading per FBC, TAS 202-94
3) Water Resistance Test, per FBC, TAS 202-94
4) Large Missile Impact Test per FBC, TAS 201-94
5) Cyclic Wind Pressure Loading per FBC, TAS 203-94
6) Forced Entry Test, per ASTM F588 and TAS 202-94

along with marked-up drawings and installation diagram of all CGI Windows and Doors, Inc. and PGT Industries, Inc., representative units listed below and tested to qualify **Dowsil 791** and **Dowsil 983** silicones, per Proposal #**19-1155TP**, prepared by Fenestration Testing Laboratory, Inc., Test Reports No.:

CGI Windows and Doors Inc. test specimens:

FTL-20-2108.1, CGI SH360 Aluminum Single Hung Window (unit 1 in proposal) **FTL-20-2108.2,** CGI CA238 Alum. Outswing Casement Window (unit 2 in proposal) **FTL-20-2108.3,** CGI SGD560 Aluminum Sliding Glass Door (unit 3 in proposal) **FTL-20-2108.4**, CGI PW410 Aluminum Fixed Window (unit 4 in proposal) and **FTL-20-2108.5**, CGI SH360 Aluminum Single Hung Window (unit 5 in proposal)all dated 08/24/20 and signed and sealed by Idalmis Ortega, P.E.

PGT Industries, Inc. test specimens:

FTL-7897, PGT PW5520 PVC Fixed Window (unit 6 in proposal), dated 09/03/14
FTL-20-2107.1, PGT SGD780 Aluminum Sliding Glass Door (unit 7 in proposal) **FTL-20-2107.2,** PGT CA740 Alum. Outswing Casement Window (unit 8 in proposal) **FTL-20-2107.3,** PGT PW7620A Aluminum Fixed Window (unit 9 in proposal) and **FTL-20-2107.4**, PGT PW7620A Aluminum Fixed Window (unit 10 in proposal) all dated 07/13/20 and signed and sealed by Idalmis Ortega, P.E.

C. CALCULATIONS

1. Anchor verification calculations and structural analysis, complying with **FBC 7th Edition (2020)**, dated 07/20/20, prepared by manufacturer, signed and sealed by Anthony Lynn Miller, P.E.

2. Glazing complies with **ASTM E1300-04, -09, -12 and -16**.

Ishaq I. Chanda

Ishaq I. Chanda, P.E.
Product Control Unit Supervisor
NOA No. 20-0729.06
Expiration Date: September 22, 2025
Approval Date: September 10, 2020

NOTICE OF ACCEPTANCE: EVIDENCE SUBMITTED

D. QUALITY ASSURANCE

1. Miami Dade Department of Regulatory and Economic Resources (RER).

E. MATERIAL CERTIFICATIONS

1. Notice of Acceptance No. **17-0808.02** issued to **Kuraray America, Inc.** for their **"SentryGlas® (Clear and White) Glass Interlayers**", expiring on 07/04/23.
2. Notice of Acceptance No. **18-0301.06** issued to Eastman Chemical Company (MA) (former Solutia, Inc.) for their **"Saflex CP- Saflex and Saflex HP Composite Glass Interlayers with PET Core",** expiring on 12/11/2023.
3. Notice of Acceptance No. **15-1201.11** issued Eastman Chemical Company (MA) (Former Solutia Inc.) "**Saflex Clear and colored glass interlayer**", expiring on 05/21/21.
4. Notice of Acceptance No. **19-0305.02** issued to Kuraray America, Inc. (former E.I. DuPont De Nemours & Co., Inc.) for their "**Trofosil® Ultra Clear, clear & color PVB Glass Interlayer**", expiring 07/08/24

F. STATEMENTS

1. Statement letters of conformance to FBC 2020(**7th** Edition), dated 07/20/20, prepared, signed & sealed by Lynn Miller, P. E.
2. Statement of Lab compliance as part of the test report.

G. OTHER

1. This NOA **revises & renews NOA #19-0603.03**, for FBC 2020 update, expiring 09/22/25.
2. RER Test proposals #**19-1155** dated 01/10/20 approved by Ishaq I. Chanda, P.E.

Ishaq I. Chanda

Ishaq I. Chanda, P.E.
Product Control Unit Supervisor
NOA No. 20-0729.06
Expiration Date: September 22, 2025
Approval Date: September 10, 2020

"SENTINEL" SERIES SGD150A ALUMINUM SLIDING GLASS DOOR

DOORS ALLOWED FOR MAX. NUMBER OF PANELS AS LISTED ON DESIGN LOAD CAPACITY CHART ON SHEET 13 OF 28, USING MEETING STILE COMBINATIONS TESTED AND SHOWN IN DRAWING DETAILS.

APPLICABLE EGRESS REQUIREMENTS PER FBC TO BE REVIEWED BY BUILDING OFFICIAL.

THIS PRODUCT HAS BEEN DESIGNED AND TESTED TO COMPLY WITH THE REQUIREMENTS OF THE 2017 (6TH EDITION)/2020 (7TH EDITION) FLORIDA BUILDING CODE INCLUDING HIGH VELOCITY HURRICANE ZONE (HVHZ).

1BY OR 2BY WOOD BUCKS & BUCK FASTENERS BY OTHERS, MUST BE DESIGNED AND INSTALLED ADEQUATELY TO TRANSFER APPLIED PRODUCT LOADS TO THE BUILDING STRUCTURE.

ANCHORS SHALL BE CORROSION RESISTANT, SPACED AS SHOWN ON DETAILS AND INSTALLED PER MANUF'S INSTRUCTIONS. SPECIFIED EMBEDMENT TO BASE MATERIAL SHALL BE BEYOND WALL DRESSING OR STUCCO.

A LOAD DURATION INCREASE IS USED IN DESIGN OF ANCHORS INTO WOOD ONLY.

ALL SHIMS TO BE HIGH IMPACT, NON-METALLIC AND NON-COMPRESSIBLE.

MATERIALS INCLUDING BUT NOT LIMITED TO STEEL/METAL SCREWS, THAT COME INTO CONTACT WITH OTHER DISSIMILAR MATERIALS SHALL MEET THE REQUIREMENTS OF THE 2017/2020 FLORIDA BLDG. CODE & ADOPTED STANDARDS.

THIS PRODUCT APPROVAL IS GENERIC AND DOES NOT PROVIDE INFORMATION FOR A SITE SPECIFIC PROJECT, i.e. LIFE SAFETY OF THIS PRODUCT, ADEQUACY OF STRUCTURE RECEIVING THIS PRODUCT AND SEALING AROUND OPENING FOR WATER INFILTRATION RESISTANCE ETC.
CONDITIONS NOT SHOWN IN THIS DRAWING ARE TO BE ANALYZED SEPARATELY, AND TO BE REVIEWED BY BUILDING OFFICIAL.

THESE DOORS ARE RATED FOR LARGE & SMALL MISSILE IMPACT. SHUTTERS ARE NOT REQUIRED.

PRODUCT REVISED
as complying with the Florida Building Code
NOA-No. 20-0729.06
Expiration Date: 09/22/2025
By: Ishay I. Chanin
Miami-Dade Product Control

INSTRUCTIONS:

USE CHARTS AS FOLLOWS.

STEP 1 DETERMINE DESIGN WIND LOAD REQUIREMENT BASED ON WIND VELOCITY, BLDG. HEIGHT, WIND ZONE USING APPLICABLE ASCE 7 STANDARD.

STEP 2 DETERMINE DOOR CAPACITY FROM TABLES ON SHEET 13 FOR THE GLASS TYPE AND REINFORCING TO USE.

STEP 3 USING CHARTS ON SHEET 15 SELECT ANCHOR OPTION WITH DESIGN RATING MORE THAN DESIGN LOAD SPECIFIED IN STEP 1 ABOVE.

STEP 4 THE LOWEST VALUE RESULTING FROM STEPS 2 AND 3 SHALL APPLY TO ENTIRE SYSTEM.

LAMINATED GLASS AND LAMINATED INSULATING GLASS LARGE/SMALL MISSILE IMPACT

Title:	Drawn By:	
SENTINEL 150 ALUM SLIDING GLASS DOOR (LMI)	AGK	
Description:	**Date:**	
COVER, INSTRUCTIONS	5/22/19	
Revision:	**Rev. By:**	**Rev. Date:**
UPDATED TO FBC 2020, ADDED ANCHORS & BACK.	AGK	7/21/20

Series/Model:	Scale:	Sheet:	Drawing No.	Rev:
SGD-150 LMI	NTS	1 OF 28	SGD150LMI-NOA	A

Impact Resistant Windows & Doors
WE'RE STRONGER™
CGI DOORS AND WINDOWS, INC.
3780 W 104TH STREET
HIALEAH, FL 33018
(305) 593-6590

PREPARED BY LYNN MILLER
1070 TECHNOLOGY DRIVE
N. VENICE, FL 34275
(941) 480-1600

REGISTRATION #29296

ANTHONY LYNN MILLER
LICENSE
No. 58705
7/21/20
STATE OF FLORIDA
PROFESSIONAL ENGINEER

A. LYNN MILLER, P.E. P.E.# 58705

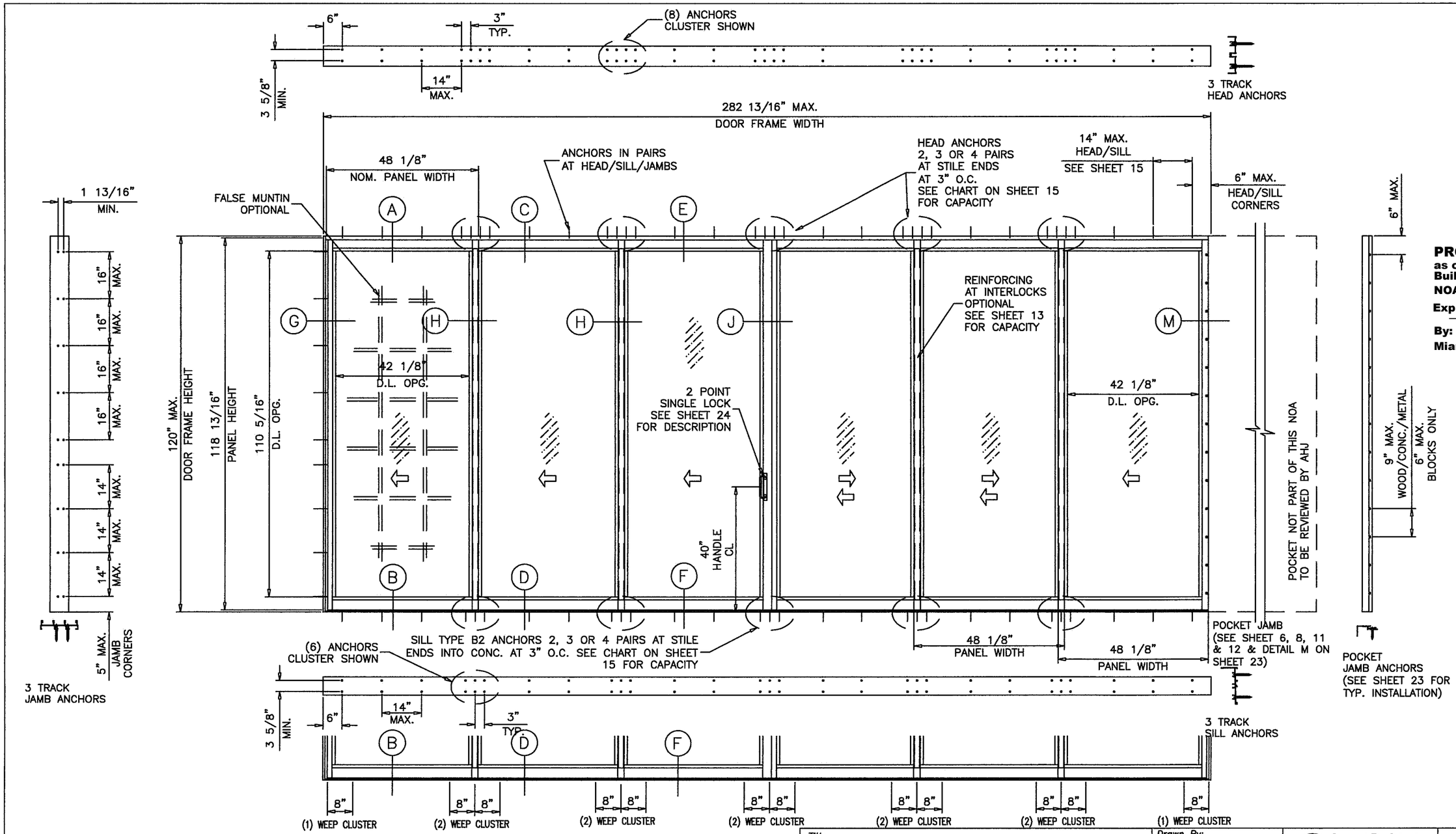

PRODUCT REVISED
as complying with the Florida Building Code
NOA-No. 20-0729.06
Expiration Date: 09/22/2025
By: Ishaq I. Chanda
Miami-Dade Product Control

TYPICAL ELEVATION
TESTED UNIT

D.L. OPENING
D.L.O HEIGHT = DOOR FRAME HEIGHT – 9 11/16"
D.L.O. WIDTH = NOM. PANEL WIDTH – 6"
PANEL HEIGHT = DOOR FRAME HEIGHT –1 3/16"

Title: SENTINEL 150 ALUM SLIDING GLASS DOOR (L.M.I.)			Drawn By: AGK		
Description: ELEVATION			Date: 5/22/19		
Revision: NO CHANGES THIS SHEET			Rev. By: AGK	Rev. Date: 7/21/20	
Series/Model: SGD-150 LMI	Scale: N.T.S.	Sheet: 2 OF 28	Drawing No. SGD150LMI-NOA		Rev: A

Impact Resistant Windows & Doors
WE'RE STRONGER™
CGI DOORS AND WINDOWS, INC.
3780 W 104TH STREET
HIALEAH, FL 33018
(305) 593-6590

PREPARED BY LYNN MILLER
1070 TECHNOLOGY DRIVE
N. VENICE, FL 34275
(941) 480-1600

REGISTRATION #29296

ANTHONY LYNN MILLER
LICENSE
No. 58705
STATE OF FLORIDA
PROFESSIONAL ENGINEER
7/21/20

A. LYNN MILLER, P.E. P.E.# 58705

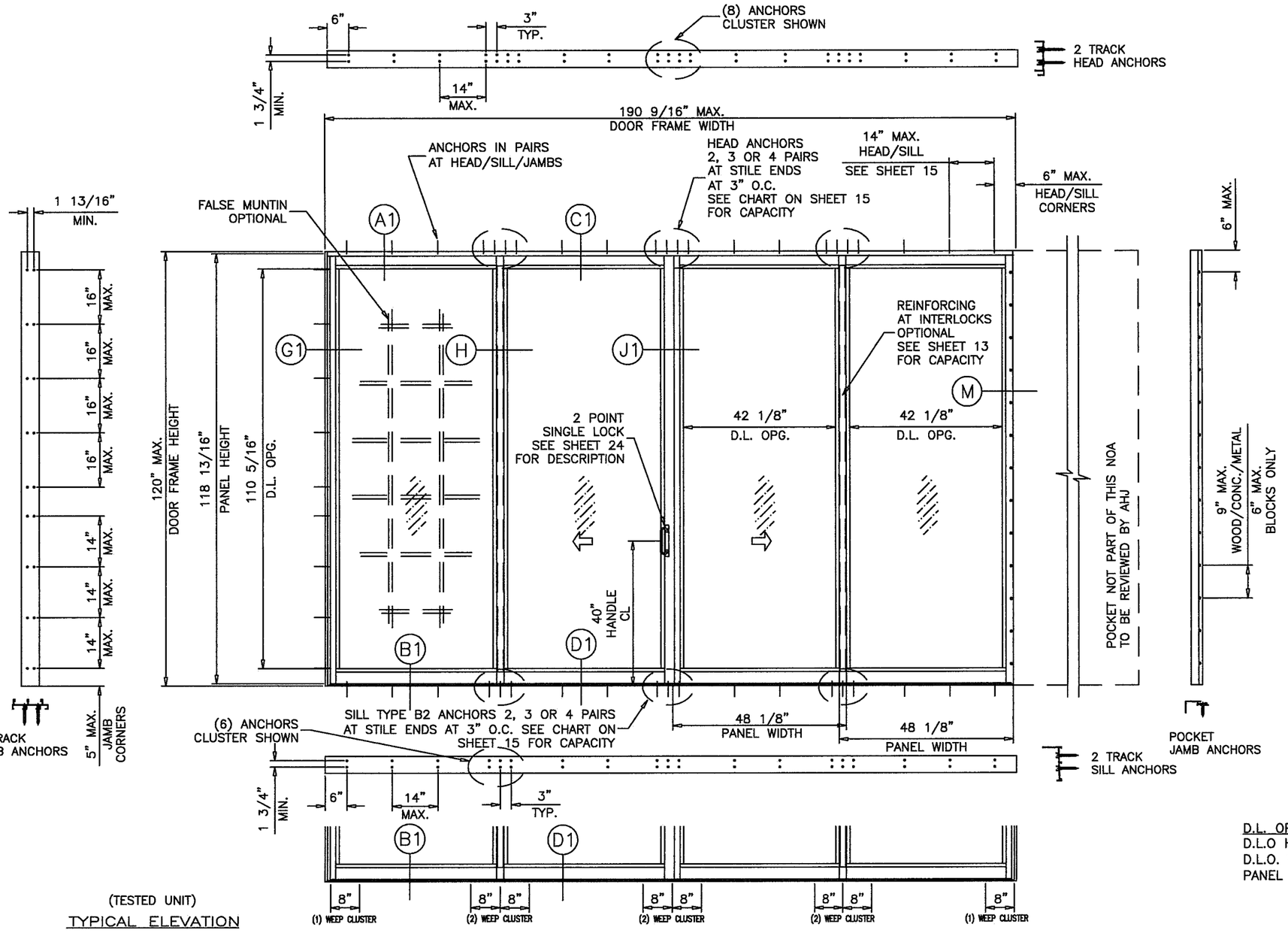

(TESTED UNIT)

TYPICAL ELEVATION

PRODUCT REVISED
as complying with the Florida Building Code
NOA-No. 20-0729.06
Expiration Date: 09/22/2025
By: Ishwar I. Chanda
Miami-Dade Product Control

D.L. OPENING
D.L.O HEIGHT = DOOR FRAME HEIGHT – 9 11/16"
D.L.O. WIDTH = NOM. PANEL WIDTH – 6"
PANEL HEIGHT = DOOR FRAME HEIGHT –1 3/16"

REFER TO PAGES 14, 15, 17 & 18 FOR WEEP SIZE.

Title:	Drawn By:	
SENTINEL 150 ALUM SLIDING GLASS DOOR (L.M.I.)	AGK	
Description:	**Date:**	
ELEVATION	5/22/19	
Revision:	**Rev. By:**	**Rev. Date:**
NO CHANGES THIS SHEET	AGK	7/21/20

Series/Model:	Scale:	Sheet:	Drawing No.	Rev:
SGD-150 LMI	N.T.S.	3 OF 28	SGD150LMI-NOA	A

Impact Resistant Windows & Doors
WE'RE STRONGER™
CGI DOORS AND WINDOWS, INC.
3780 W 104TH STREET
HIALEAH, FL 33018
(305) 593-6590

PREPARED BY LYNN MILLER
1070 TECHNOLOGY DRIVE
N. VENICE, FL 34275
(941) 480-1600

REGISTRATION #29296

ANTHONY LYNN MILLER LICENSE No. 58705 STATE OF FLORIDA PROFESSIONAL ENGINEER
7/21/20

A. LYNN MILLER, P.E. P.E.# 58705

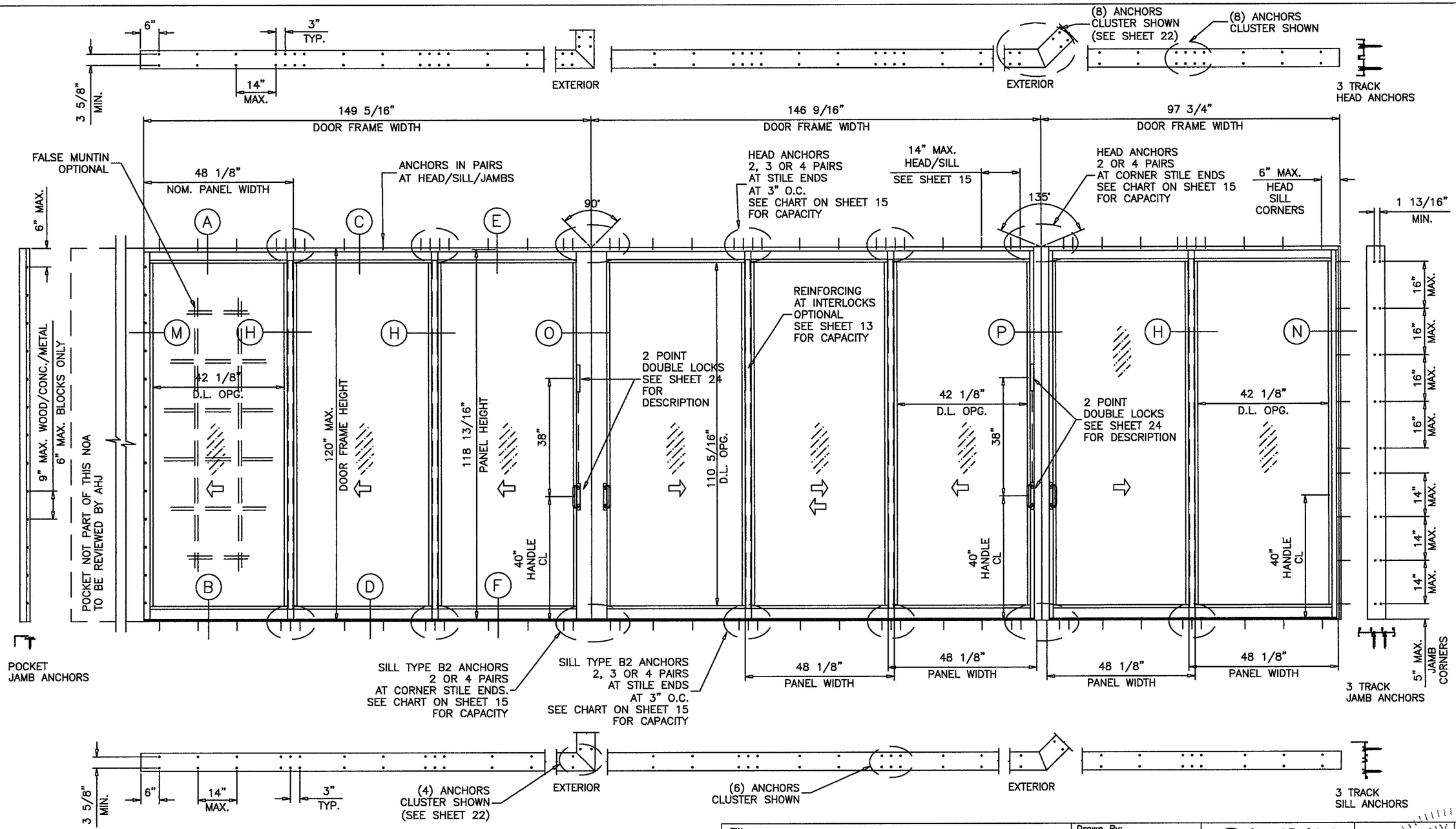

PRODUCT REVISED
as complying with the Florida Building Code
NOA-No. 20-0729.06
Expiration Date: 09/22/2025
By: Ishay I. Chanin
Miami-Dade Product Control

(TESTED UNIT)
TYPICAL ELEVATION

Title: SENTINEL 150 ALUM SLIDING GLASS DOOR (L.M.I.)			*Drawn By:* AGK		
Description: ELEVATION			*Date:* 5/22/19		
Revision: NO CHANGES THIS SHEET			*Rev. By:* AGK	*Rev. Date:* 7/21/20	
Series/Model: SGD-150 LMI	*Scale:* N.T.S.	*Sheet:* 4 OF 28	*Drawing No.* SGD150LMI-NOA		*Rev:* A

Impact Resistant Windows & Doors
WE'RE STRONGER™
CGI DOORS AND WINDOWS, INC.
3780 W 104TH STREET
HIALEAH, FL 33018
(305) 593-6590

PREPARED BY LYNN MILLER
1070 TECHNOLOGY DRIVE
N. VENICE, FL 34275
(941) 480-1600

REGISTRATION #29296

ANTHONY LYNN MILLER LICENSE No. 58705 STATE OF FLORIDA PROFESSIONAL ENGINEER
7/21/20
A. LYNN MILLER, P.E. P.E.# 58705

THIS APPROVAL QUALIFIES DOORS WITH APPROVED CONFIGURATIONS SHOWN WITH 90° AND 135° CORNERS WHERE STILE CONFIGURATIONS SHOWN ON SHEET 22 ARE PRESENT.
FOR DOORS USING 90° & 135° CORNER STILES LIMIT MAX. DESIGN LOADS TO ±60.0 PSF

XXX (SHOWN)
OXX
XXO
XXX (REVERSE)

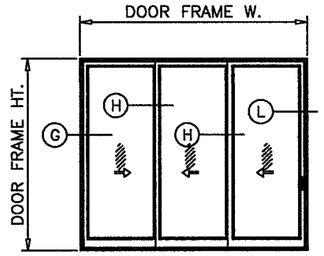

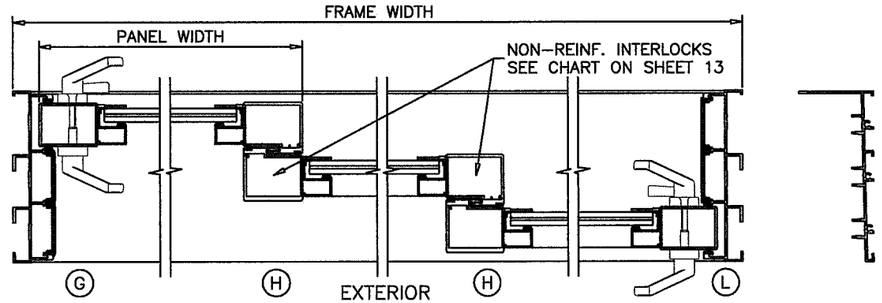

XXXXXX (SHOWN)
OXXXXO

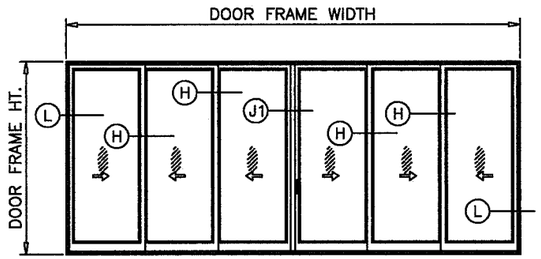

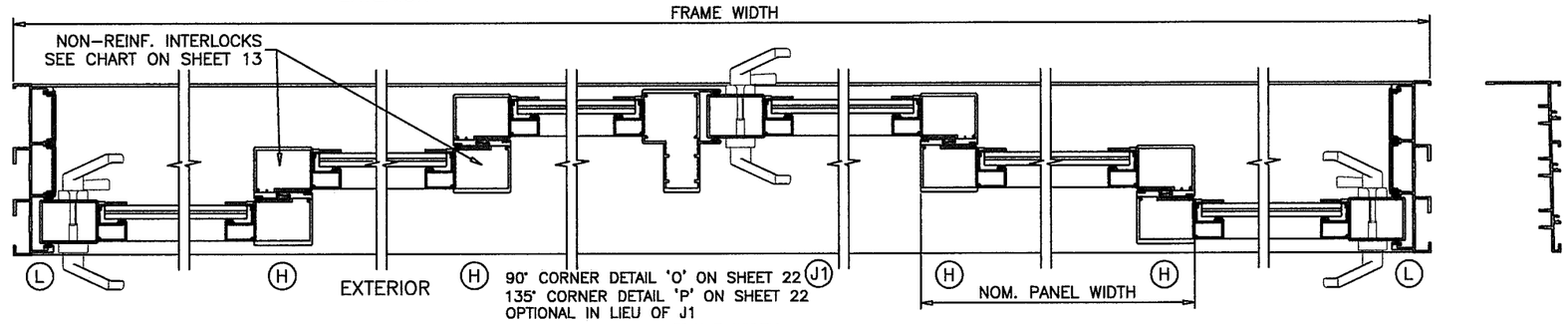

XXXXXX (SHOWN)

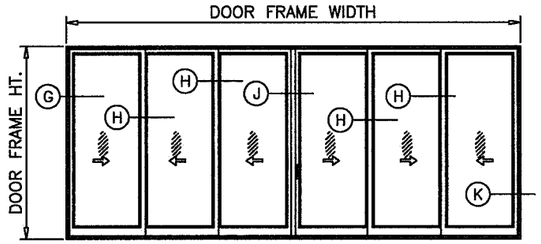

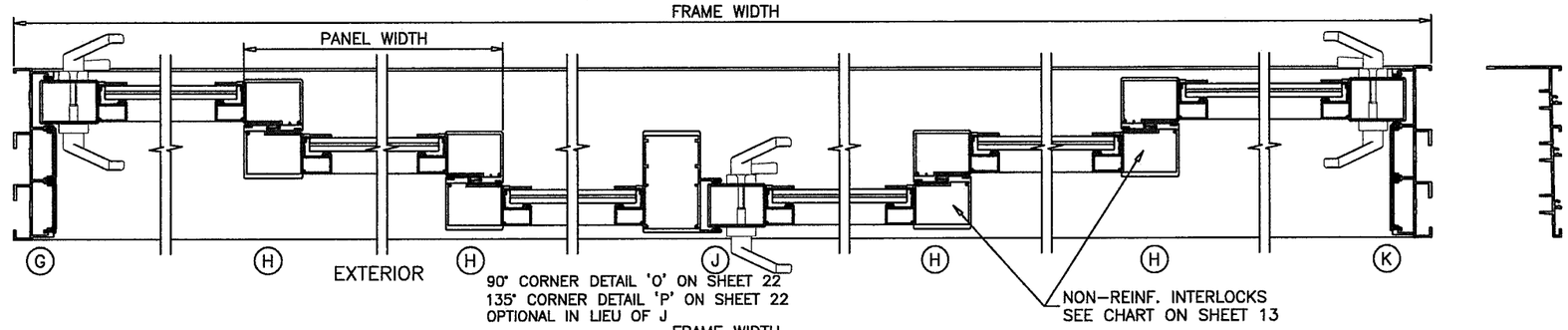

XXXXXO (SHOWN)
OXXXXO

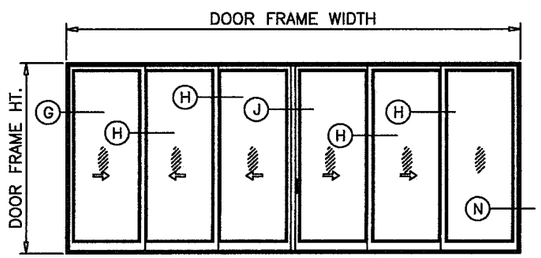

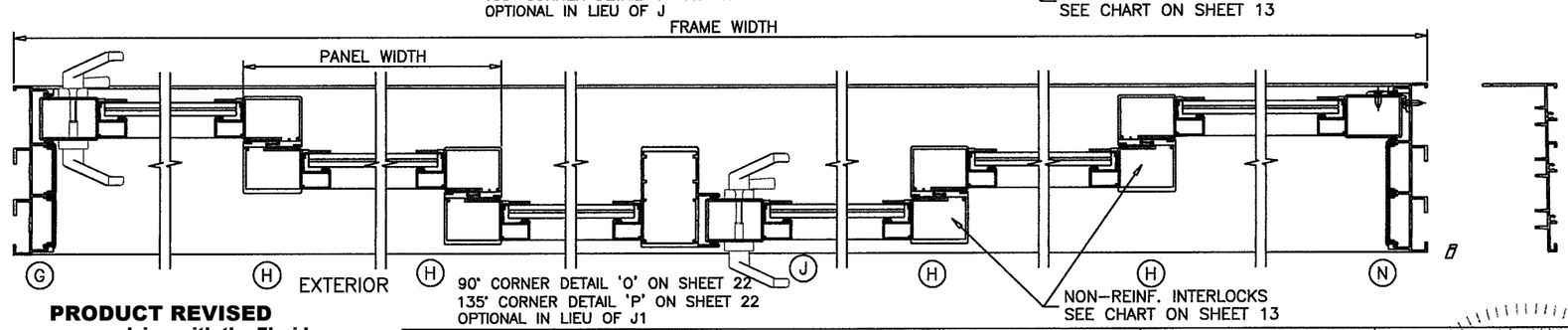

APPROVED CONFIGURATIONS
NON-POCKETED DOORS (NON-REINFORCED SHOWN)
SEE SHEET 13 FOR Dp AND REINFORCING OPTIONS

THREE (3) TRACKS

NOTE:
1. CONFIGURATIONS SHOWN FOR ILLUSTRATION PURPOSES ONLY.
2. FOR APPLICABLE NON REINFORCED OR REINFORCED DESIGN PRESSURES SEE SHEET 13.
3. FOR ANCHOR DETAILS SEE SHEETS 15 THRU 23.
4. DOOR SHALL MEET EGRESS REQUIREMENTS AS APPLICABLE PER FBC.

PRODUCT REVISED
as complying with the Florida Building Code
NOA-No. 20-0729.06
Expiration Date: 09/22/2025
By: Ishwar I. Chanda
Miami-Dade Product Control

Title: SENTINEL 150 ALUM SLIDING GLASS DOOR (L.M.I.)			Drawn By: AGK	
Description: CONFIGURATIONS			Date: 5/22/19	
Revision: NO CHANGES THIS SHEET			Rev. By: AGK	Rev. Date: 7/21/20
Series/Model: SGD-150 LMI	Scale: N.T.S.	Sheet: 5 OF 28	Drawing No. SGD150LMI-NOA	Rev: A

Impact Resistant Windows & Doors
WE'RE STRONGER™
CGI DOORS AND WINDOWS, INC.
3780 W 104TH STREET
HIALEAH, FL 33018
(305) 593-6590

PREPARED BY LYNN MILLER
1070 TECHNOLOGY DRIVE
N. VENICE, FL 34275
(941) 480-1600

REGISTRATION #29296

ANTHONY LYNN MILLER
LICENSE
No. 58705
7/21/20
STATE OF FLORIDA
PROFESSIONAL ENGINEER

A. LYNN MILLER, P.E. P.E.# 58705

THIS APPROVAL QUALIFIES DOORS WITH APPROVED CONFIGURATIONS SHOWN WITH 90° AND 135° CORNERS WHERE STILE CONFIGURATIONS SHOWN ON SHEET 22 ARE PRESENT.
FOR DOORS USING 90° & 135° CORNER STILES LIMIT MAX. DESIGN LOADS TO ±60.0 PSF

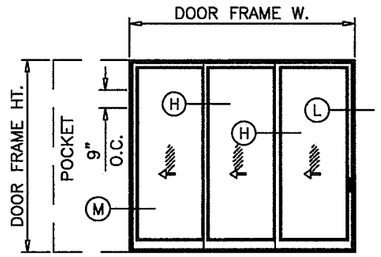

PXXX(SHOWN)
XXXP

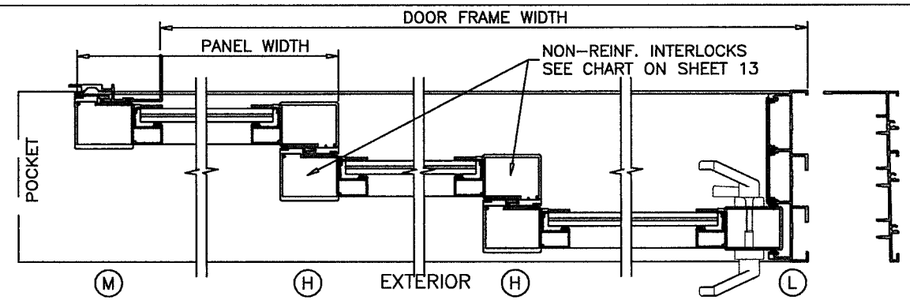

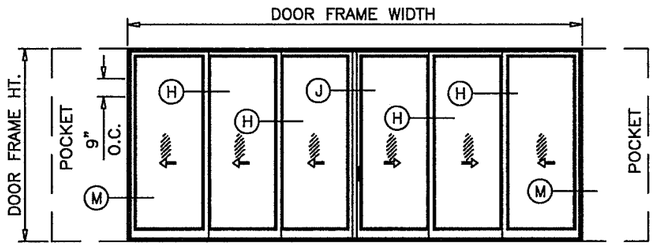

PXXXXXXP (SHOWN)

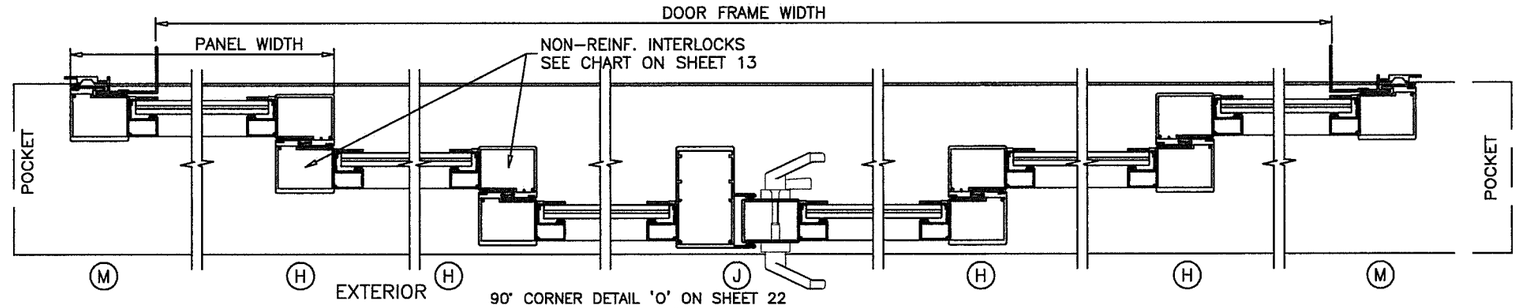

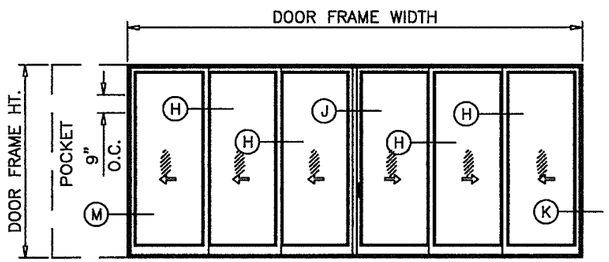

PXXXXXXX(SHOWN)
XXXXXXP

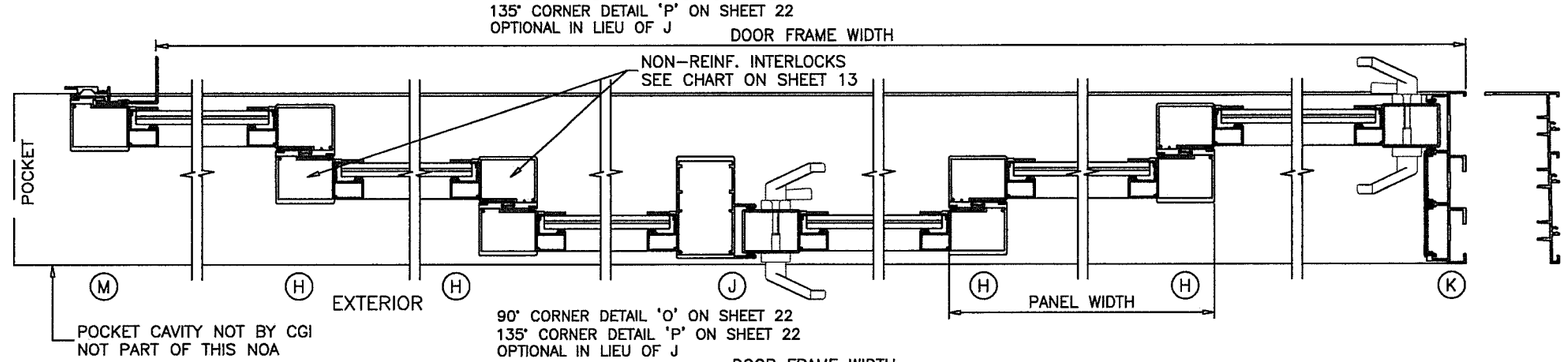

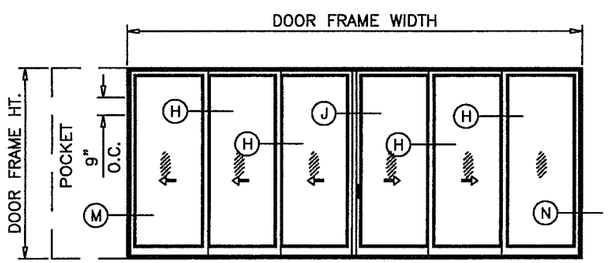

PXXXXXO(SHOWN)

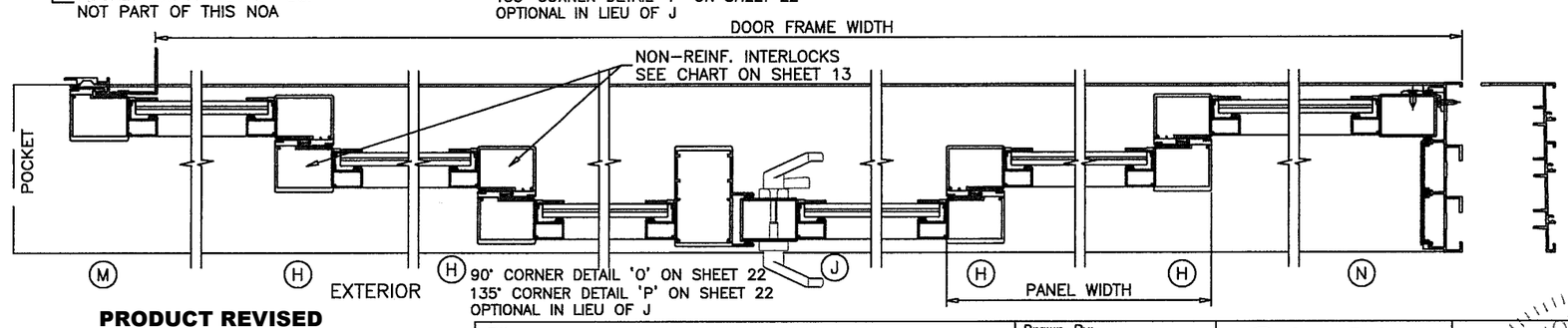

OXXXXXP

APPROVED CONFIGURATIONS

POCKETED DOORS (NON-REINFORCED SHOWN)

SEE SHEET 13 FOR Dp AND REINFORCING OPTIONS

NOTE:

THREE (3) TRACKS

POCKETS ARE NOT PART OF THIS APPROVAL AND TO BE REVIEWED BY AHJ.

PRODUCT REVISED
as complying with the Florida Building Code
NOA-No. 20-0729.06
Expiration Date: 09/22/2025
By: Ishaq I. Chanda
Miami-Dade Product Control

1. CONFIGURATIONS SHOWN FOR ILLUSTRATION PURPOSES ONLY.
2. FOR APPLICABLE NON REINFORCED OR REINFORCED DESIGN PRESSURES SEE SHEET 13.
3. FOR ANCHOR DETAILS SEE SHEETS 15 THRU 23.
4. DOOR SHALL MEET EGRESS REQUIREMENTS AS APPLICABLE PER FBC.

Title:	Drawn By:
SENTINEL 150 ALUM SLIDING GLASS DOOR (L.M.I.)	AGK
Description: CONFIGURATIONS	**Date:** 5/22/19
Revision: NO CHANGES THIS SHEET	**Rev. By:** AGK **Rev. Date:** 7/21/20

Series/Model:	Scale:	Sheet:	Drawing No.	Rev:
SGD-150 LMI	N.T.S.	6 OF 28	SGD150LMI-NOA	A

Impact Resistant Windows & Doors
WE'RE STRONGER™
CGI DOORS AND WINDOWS, INC.
3780 W 104TH STREET
HIALEAH, FL 33018
(305) 593-6590

PREPARED BY LYNN MILLER
1070 TECHNOLOGY DRIVE
N. VENICE, FL 34275
(941) 480-1600

REGISTRATION #29296

ANTHONY LYNN MILLER
LICENSE
No. 58705
STATE OF FLORIDA
PROFESSIONAL ENGINEER
7/21/20

A. LYNN MILLER, P.E. P.E.# 58705

THIS APPROVAL QUALIFIES DOORS WITH APPROVED CONFIGURATIONS SHOWN WITH 90° AND 135° CORNERS WHERE STILE CONFIGURATIONS SHOWN ON SHEET 22 ARE PRESENT.
FOR DOORS USING 90° & 135° CORNER STILES LIMIT MAX. DESIGN LOADS TO ±60.0 PSF

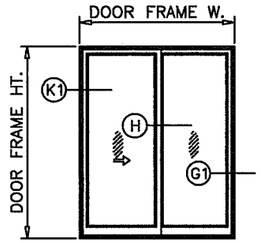

XO (SHOWN)
OX

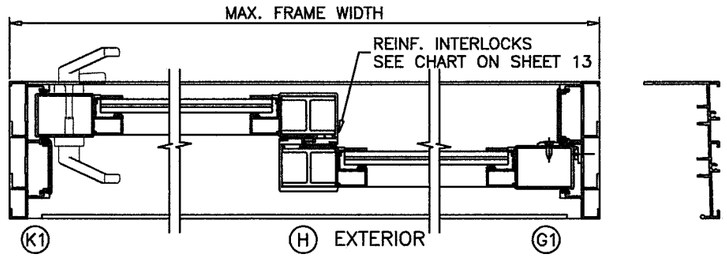

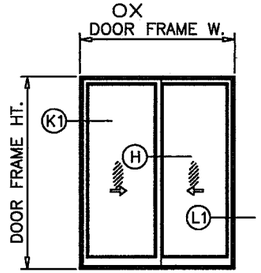

XX

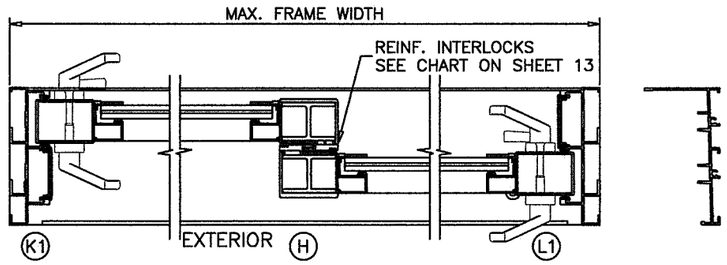

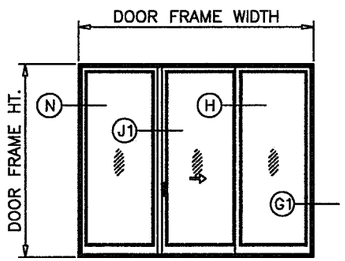

OXO (SHOWN)
OXO (REVERSE)

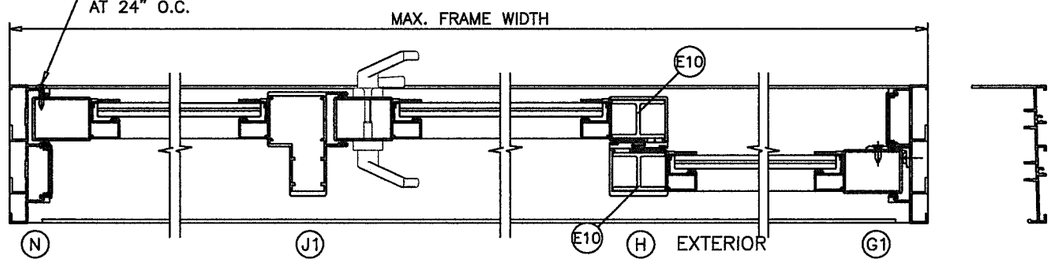

90° CORNER DETAIL 'O' ON SHEET 22
135° CORNER DETAIL 'P' ON SHEET 22
OPTIONAL IN LIEU OF J1

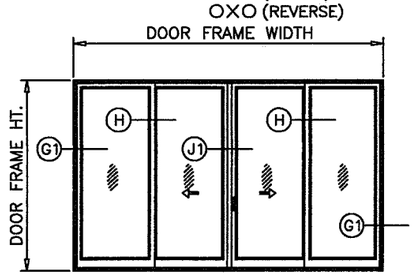

OXXO
XXXX (SIMILAR)

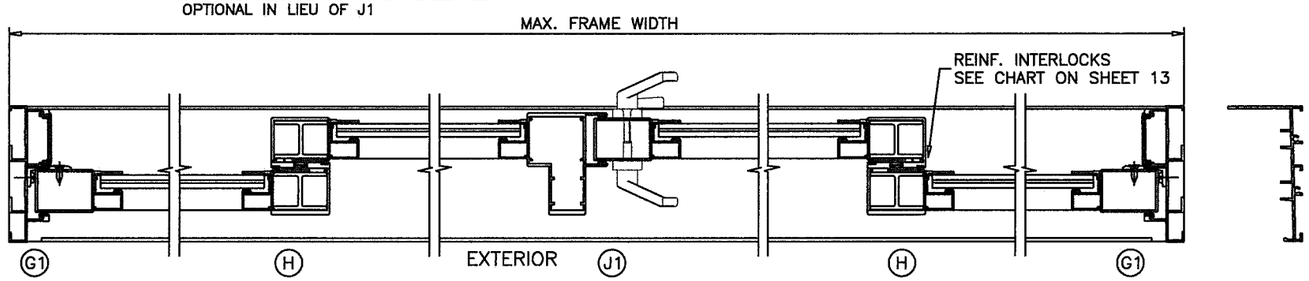

90° CORNER DETAIL 'O' ON SHEET 22
135° CORNER DETAIL 'P' ON SHEET 22
OPTIONAL IN LIEU OF J1

PRODUCT REVISED
as complying with the Florida Building Code
NOA-No. 20-0729.06
Expiration Date: 09/22/2025
By: Ishaq I. Chanda
Miami-Dade Product Control

APPROVED CONFIGURATIONS
NON-POCKETED DOORS (NON-REINFORCED SHOWN)
SEE SHEET 13 FOR Dp AND REINFORCING OPTIONS

TWO (2) TRACKS

NOTE:
1. CONFIGURATIONS SHOWN FOR ILLUSTRATION PURPOSES ONLY.
2. FOR APPLICABLE NON REINFORCED OR REINFORCED DESIGN PRESSURES SEE SHEET 13.
3. FOR ANCHOR DETAILS SEE SHEETS 15 THRU 23.
4. DOOR SHALL MEET EGRESS REQUIREMENTS AS APPLICABLE PER FBC.

Title: SENTINEL 150 ALUM SLIDING GLASS DOOR (L.M.I.)			Drawn By: AGK		Impact Resistant Windows & Doors WE'RE STRONGER™
Description: CONFIGURATIONS			Date: 5/22/19		CGI DOORS AND WINDOWS, INC. 3780 W 104TH STREET HIALEAH, FL 33018 (305) 593-6590
Revision: NO CHANGES THIS SHEET			Rev. By: AGK	Rev. Date: 7/21/20	PREPARED BY LYNN MILLER 1070 TECHNOLOGY DRIVE N. VENICE, FL 34275 (941) 480-1600
Series/Model: SGD-150 LMI	Scale: N.T.S.	Sheet: 7 OF 28	Drawing No. SGD150LMI-NOA	Rev: A	REGISTRATION #29296

ANTHONY LYNN MILLER
LICENSE
No. 58705
STATE OF FLORIDA
PROFESSIONAL ENGINEER
7/21/20
A. LYNN MILLER, P.E. P.E.# 58705

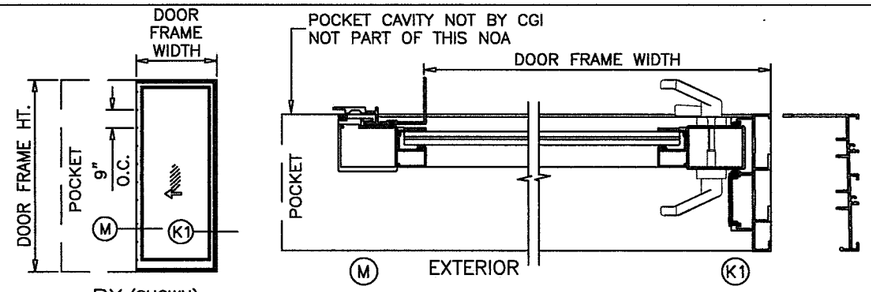

PX (SHOWN)
XP

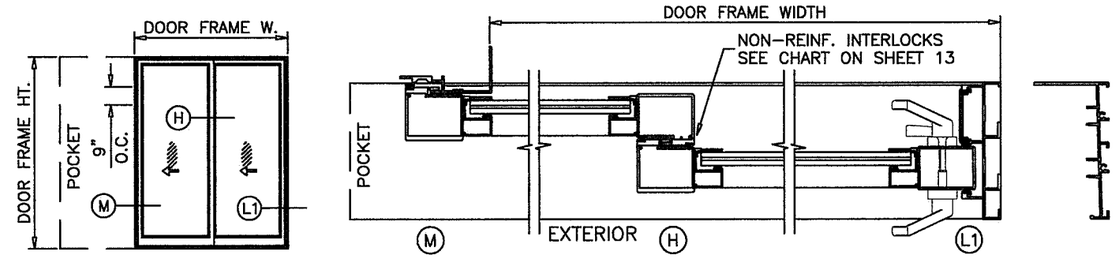

PXX (SHOWN)
XXP

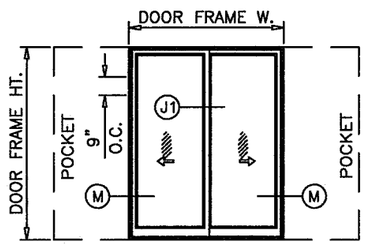

PXXP

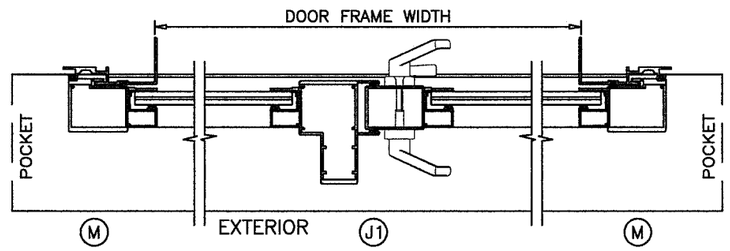

90° CORNER DETAIL 'O' ON SHEET 22
135° CORNER DETAIL 'P' ON SHEET 22
OPTIONAL IN LIEU OF J1

THIS APPROVAL QUALIFIES DOORS WITH APPROVED CONFIGURATIONS SHOWN WITH 90° AND 135° CORNERS WHERE STILE CONFIGURATIONS SHOWN ON SHEET 22 ARE PRESENT.
FOR DOORS USING 90° & 135° CORNER STILES LIMIT MAX. DESIGN LOADS TO ±60.0 PSF

NOTE:
1. CONFIGURATIONS SHOWN FOR ILLUSTRATION PURPOSES ONLY.
2. FOR APPLICABLE NON REINFORCED OR REINFORCED DESIGN PRESSURES SEE SHEET 13.
3. FOR ANCHOR DETAILS SEE SHEETS 15 THRU 23.
4. DOOR SHALL MEET EGRESS REQUIREMENTS AS APPLICABLE PER FBC.

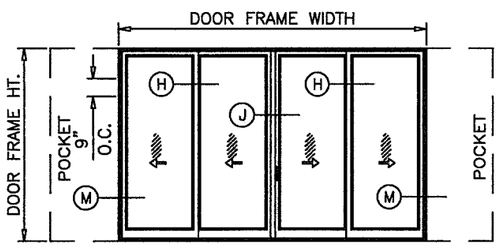

PXXXXP

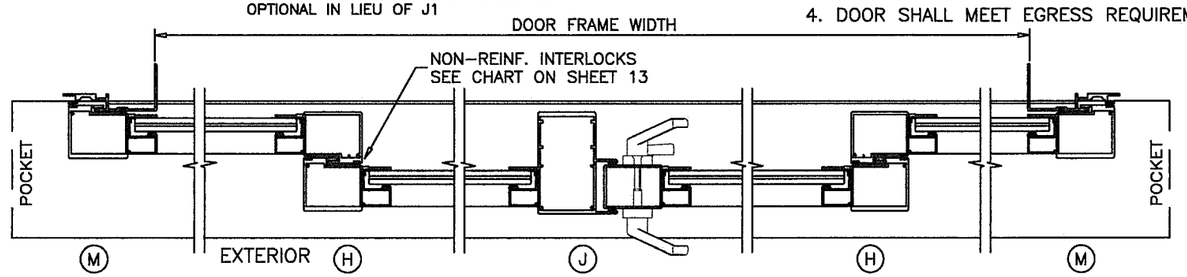

90° CORNER DETAIL 'O' ON SHEET 22
135° CORNER DETAIL 'P' ON SHEET 22
OPTIONAL IN LIEU OF J1

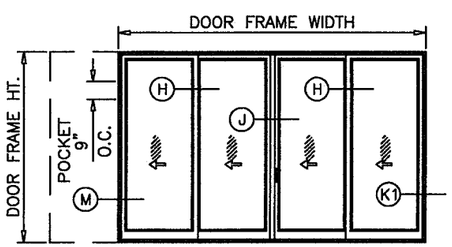

PXXXX (SHOWN)
PXXXO
XXXXP
OXXXP

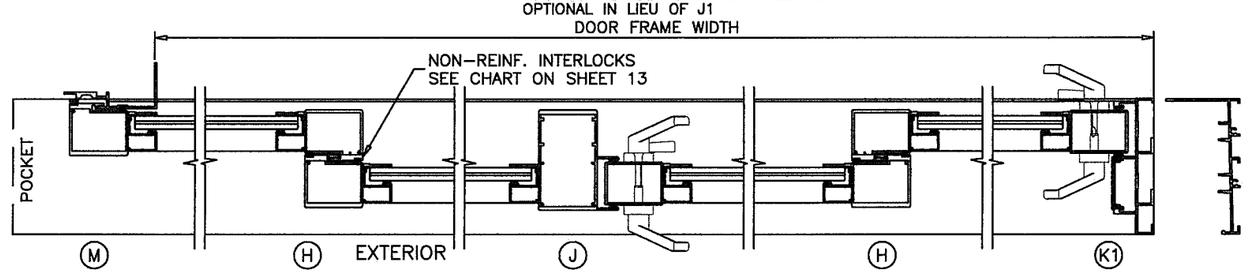

90° CORNER DETAIL 'O' ON SHEET 22
135° CORNER DETAIL 'P' ON SHEET 22
OPTIONAL IN LIEU OF J1

PRODUCT REVISED
as complying with the Florida Building Code
NOA-No. 20-0729.06
Expiration Date: 09/22/2025
By: Ishaq I. Chanda
Miami-Dade Product Control

POCKETS ARE NOT PART OF THIS APPROVAL AND TO BE REVIEWED BY AHJ.

APPROVED CONFIGURATIONS
POCKETED DOORS (NON-REINFORCED SHOWN)
SEE SHEET 13 FOR Dp AND REINFORCING OPTIONS

TWO (2) TRACKS

Title:	Drawn By:
SENTINEL 150 ALUM SLIDING GLASS DOOR (L.M.I.)	AGK
Description: CONFIGURATIONS	**Date:** 5/22/19
Revision: NO CHANGES THIS SHEET	**Rev. By:** AGK **Rev. Date:** 7/21/20

Series/Model:	Scale:	Sheet:	Drawing No.	Rev:
SGD-150 LMI	N.T.S.	8 OF 28	SGD150LMI-NOA	A

Impact Resistant Windows & Doors
WE'RE STRONGER™
CGI DOORS AND WINDOWS, INC.
3780 W 104TH STREET
HIALEAH, FL 33018
(305) 593-6590

PREPARED BY LYNN MILLER
1070 TECHNOLOGY DRIVE
N. VENICE, FL 34275
(941) 480-1600
REGISTRATION #29296

ANTHONY LYNN MILLER
LICENSE
No. 58705
STATE OF FLORIDA
PROFESSIONAL ENGINEER
7/21/20
A. LYNN MILLER, P.E. P.E.# 58705

THIS APPROVAL QUALIFIES DOORS WITH APPROVED CONFIGURATIONS SHOWN WITH 90° AND 135° CORNERS WHERE STILE CONFIGURATIONS SHOWN ON SHEET 22 ARE PRESENT.
FOR DOORS USING 90° & 135° CORNER STILES LIMIT MAX. DESIGN LOADS TO ±60.0 PSF

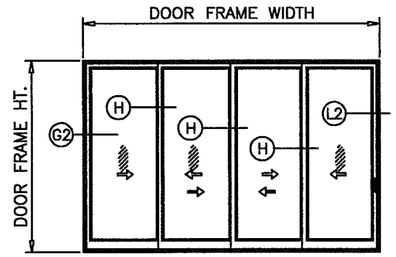

XXXX (SHOWN)
OXXX
XXXO
XXXX (REVERSE)

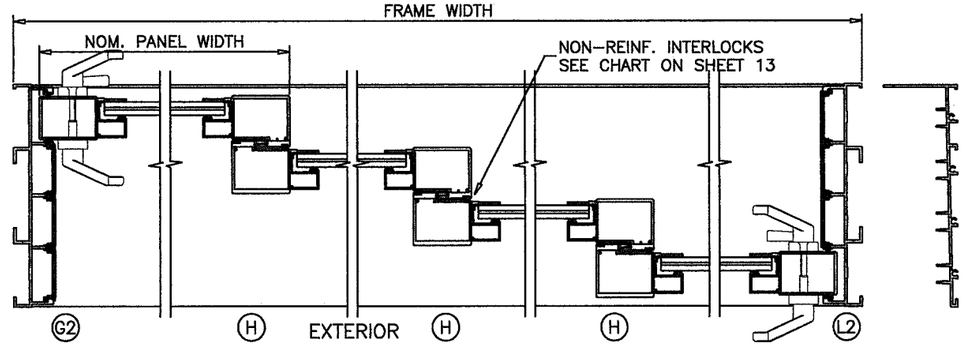

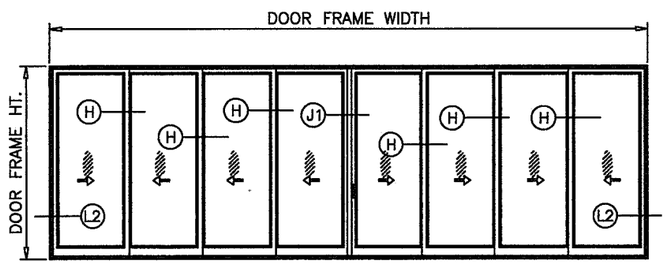

XXXXXXXX (SHOWN)
OXXXXXXO

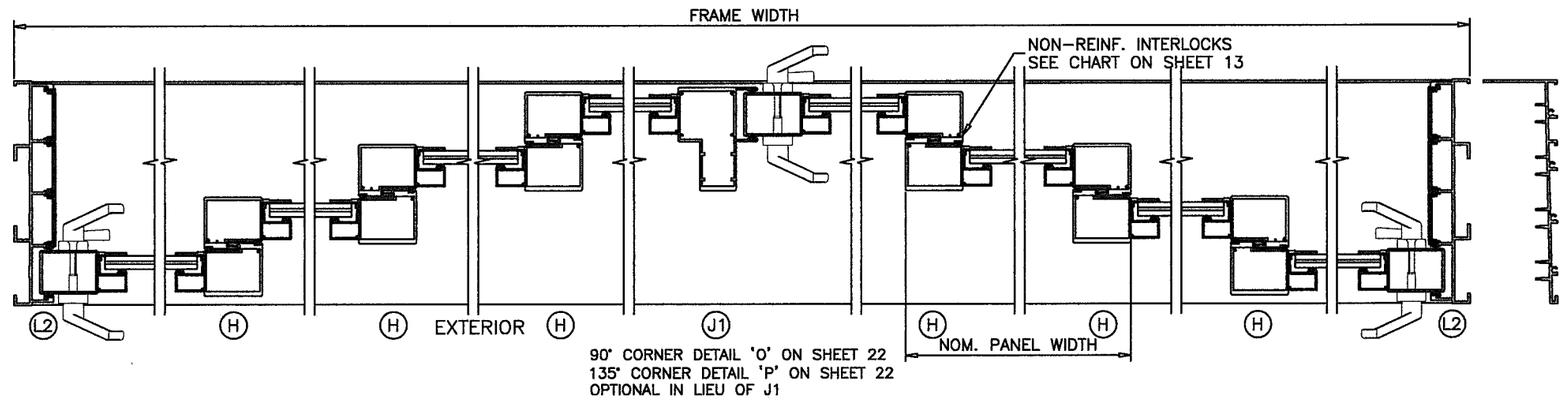

APPROVED CONFIGURATIONS
NON-POCKETED DOORS (NON-REINFORCED SHOWN)
SEE SHEET 13 FOR Dp AND REINFORCING OPTIONS

FOUR (4) TRACKS

NOTE:
1. CONFIGURATIONS SHOWN FOR ILLUSTRATION PURPOSES ONLY.
2. FOR APPLICABLE NON REINFORCED OR REINFORCED DESIGN PRESSURES SEE SHEET 13.
3. FOR ANCHOR DETAILS SEE SHEETS 15 THRU 23.
4. DOOR SHALL MEET EGRESS REQUIREMENTS AS APPLICABLE PER FBC.

PRODUCT REVISED
as complying with the Florida Building Code
NOA-No. 20-0729.06
Expiration Date: 09/22/2025
By: Ishaq I. Chanda
Miami-Dade Product Control

Title:	Drawn By:	
SENTINEL 150 ALUM SLIDING GLASS DOOR (L.M.I.)	AGK	
Description:	Date:	
CONFIGURATIONS	5/22/19	
Revision:	Rev. By:	Rev. Date:
NO CHANGES THIS SHEET	AGK	7/21/20

Series/Model:	Scale:	Sheet:	Drawing No.	Rev:
SGD-150 LMI	N.T.S.	9 OF 28	SGD150LMI-NOA	A

Impact Resistant Windows & Doors
WE'RE STRONGER™
CGI DOORS AND WINDOWS, INC.
3780 W 104TH STREET
HIALEAH, FL 33018
(305) 593-6590

PREPARED BY LYNN MILLER
1070 TECHNOLOGY DRIVE
N. VENICE, FL 34275
(941) 480-1600

REGISTRATION #29296

ANTHONY LYNN MILLER
LICENSE
No. 58705
7/21/20
STATE OF FLORIDA
PROFESSIONAL ENGINEER

A. LYNN MILLER, P.E. P.E.# 58705

THIS APPROVAL QUALIFIES DOORS WITH APPROVED CONFIGURATIONS SHOWN WITH 90° AND 135° CORNERS WHERE STILE CONFIGURATIONS SHOWN ON SHEET 22 ARE PRESENT.
FOR DOORS USING 90° & 135° CORNER STILES LIMIT MAX. DESIGN LOADS TO ±60.0 PSF

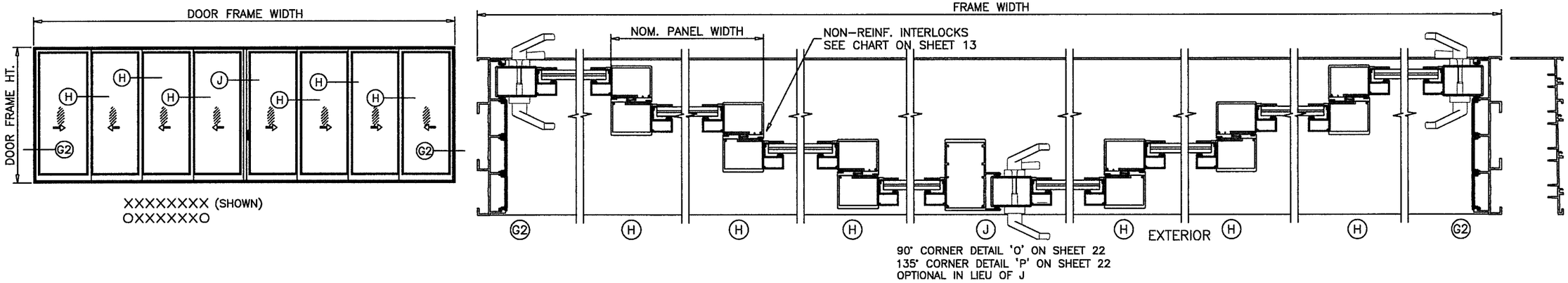

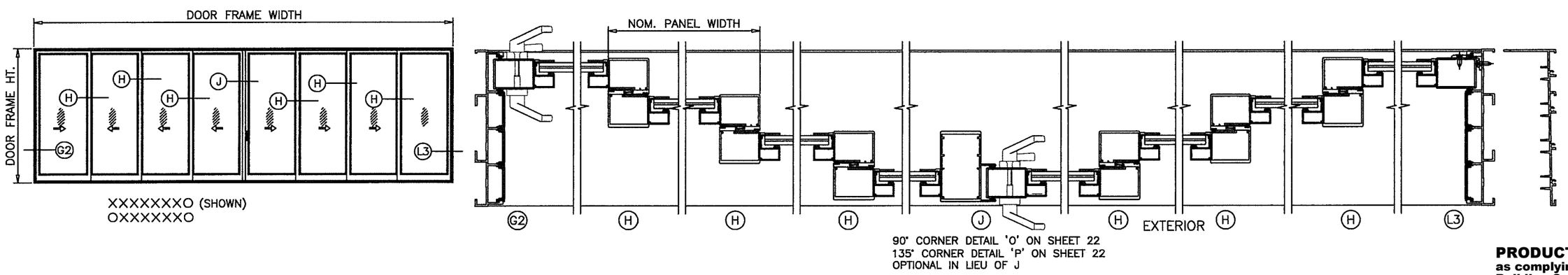

PRODUCT REVISED
as complying with the Florida Building Code
NOA-No. 20-0729.06
Expiration Date: 09/22/2025
By: Ishaq I. Chanda
Miami-Dade Product Control

APPROVED CONFIGURATIONS
NON-POCKETED DOORS (NON-REINFORCED SHOWN)
SEE SHEET 13 FOR Dp AND REINFORCING OPTIONS

FOUR (4) TRACKS

NOTE:
1. CONFIGURATIONS SHOWN FOR ILLUSTRATION PURPOSES ONLY.
2. FOR APPLICABLE NON REINFORCED OR REINFORCED DESIGN PRESSURES SEE SHEET 13.
3. FOR ANCHOR DETAILS SEE SHEETS 15 THRU 23.
4. DOOR SHALL MEET EGRESS REQUIREMENTS AS APPLICABLE PER FBC.

Title:	Drawn By:	
SENTINEL 150 ALUM SLIDING GLASS DOOR (L.M.I.)	AGK	
Description:	**Date:**	
CONFIGURATIONS	5/22/19	
Revision:	**Rev. By:**	**Rev. Date:**
NO CHANGES THIS SHEET	AGK	7/21/20

Series/Model:	Scale:	Sheet:	Drawing No.	Rev:
SGD-150 LMI	N.T.S.	10 OF 28	SGD150LMI-NOA	A

Impact Resistant Windows & Doors
WE'RE STRONGER™
CGI DOORS AND WINDOWS, INC.
3780 W 104TH STREET
HIALEAH, FL 33018
(305) 593-6590

PREPARED BY LYNN MILLER
1070 TECHNOLOGY DRIVE
N. VENICE, FL 34275
(941) 480-1600

REGISTRATION #29296

ANTHONY LYNN MILLER
LICENSE
No. 58705
7/21/20
STATE OF FLORIDA
PROFESSIONAL ENGINEER

A. LYNN MILLER, P.E. P.E.# 58705

THIS APPROVAL QUALIFIES DOORS WITH APPROVED CONFIGURATIONS SHOWN WITH 90° AND 135° CORNERS WHERE STILE CONFIGURATIONS SHOWN ON SHEET 22 ARE PRESENT.
FOR DOORS USING 90° & 135° CORNER STILES LIMIT MAX. DESIGN LOADS TO ±60.0 PSF

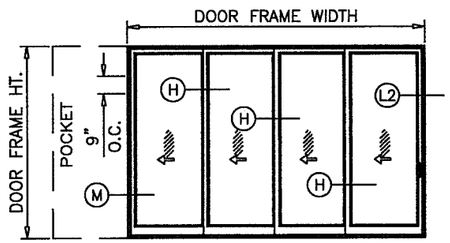

PXXXX (SHOWN)
XXXXP

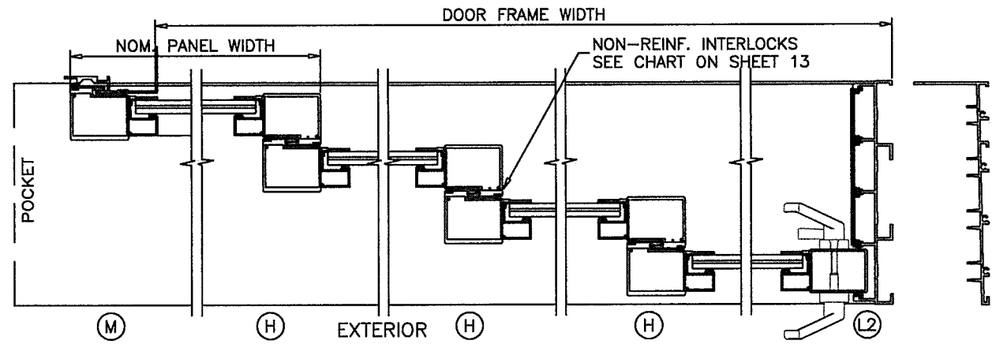

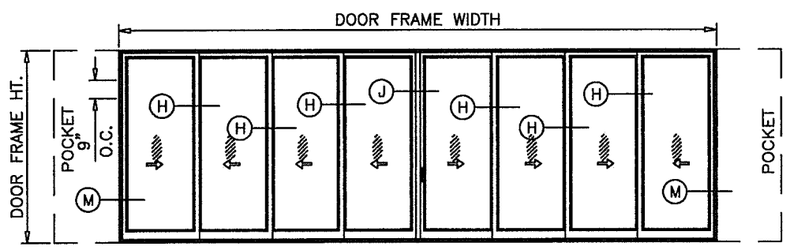

PXXXXXXXXP (SHOWN)

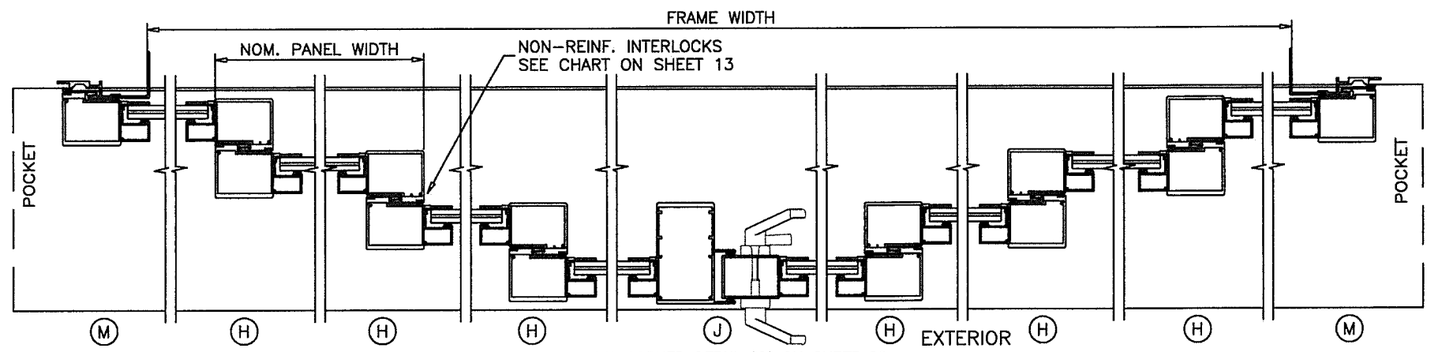

90° CORNER DETAIL 'O' ON SHEET 22
135° CORNER DETAIL 'P' ON SHEET 22
OPTIONAL IN LIEU OF J

APPROVED CONFIGURATIONS
POCKETED DOORS (NON-REINFORCED SHOWN)
SEE SHEET 13 FOR Dp AND REINFORCING OPTIONS

FOUR (4) TRACKS

POCKETS ARE NOT PART OF THIS APPROVAL AND TO BE REVIEWED BY AHJ.

NOTE:
1. CONFIGURATIONS SHOWN FOR ILLUSTRATION PURPOSES ONLY.
2. FOR APPLICABLE NON REINFORCED OR REINFORCED DESIGN PRESSURES SEE SHEET 13.
3. FOR ANCHOR DETAILS SEE SHEETS 15 THRU 23.
4. DOOR SHALL MEET EGRESS REQUIREMENTS AS APPLICABLE PER FBC.

PRODUCT REVISED
as complying with the Florida Building Code
NOA-No. 20-0729.06
Expiration Date: 09/22/2025
By: Ishwar I. Chandra
Miami-Dade Product Control

Title: SENTINEL 150 ALUM SLIDING GLASS DOOR (L.M.I.)			*Drawn By:* AGK		Impact Resistant Windows & Doors WE'RE STRONGER™ CGI DOORS AND WINDOWS, INC. 3780 W 104TH STREET HIALEAH, FL 33018 (305) 593-6590
Description: EXTRUSIONS, BOM			*Date:* 5/22/19		
Revision: NO CHANGES THIS SHEET			*Rev. By:* AGK	*Rev. Date:* 7/21/20	PREPARED BY LYNN MILLER 1070 TECHNOLOGY DRIVE N. VENICE, FL 34275 (941) 480-1600
Series/Model: SGD-150 LMI	*Scale:* N.T.S.	*Sheet:* 11 OF 28	*Drawing No.* SGD150LMI-NOA	*Rev:* A	REGISTRATION #29296

ANTHONY LYNN MILLER LICENSE No. 58705 STATE OF FLORIDA PROFESSIONAL ENGINEER
7/21/20
A. LYNN MILLER, P.E. P.E.# 58705

THIS APPROVAL QUALIFIES DOORS WITH APPROVED CONFIGURATIONS SHOWN WITH 90° AND 135° CORNERS WHERE STILE CONFIGURATIONS SHOWN ON SHEET 22 ARE PRESENT.
FOR DOORS USING 90° & 135° CORNER STILES LIMIT MAX. DESIGN LOADS TO ±60.0 PSF

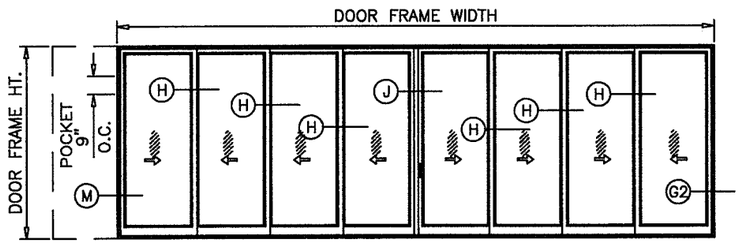

PXXXXXXXX (SHOWN)
XXXXXXXXP
OXXXXXXXP

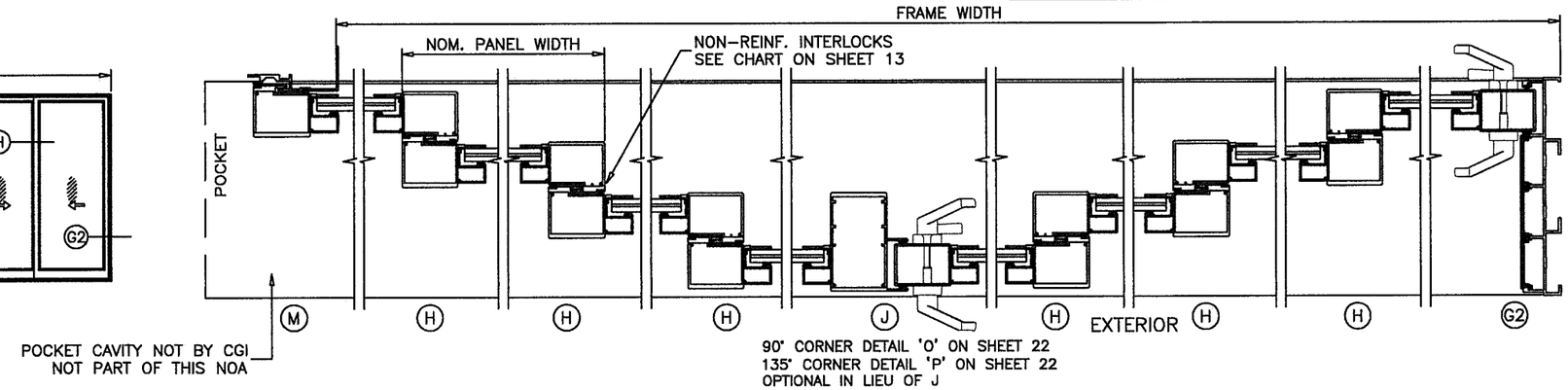

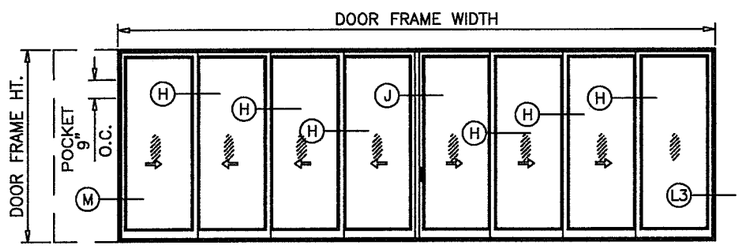

PXXXXXXXO (SHOWN)

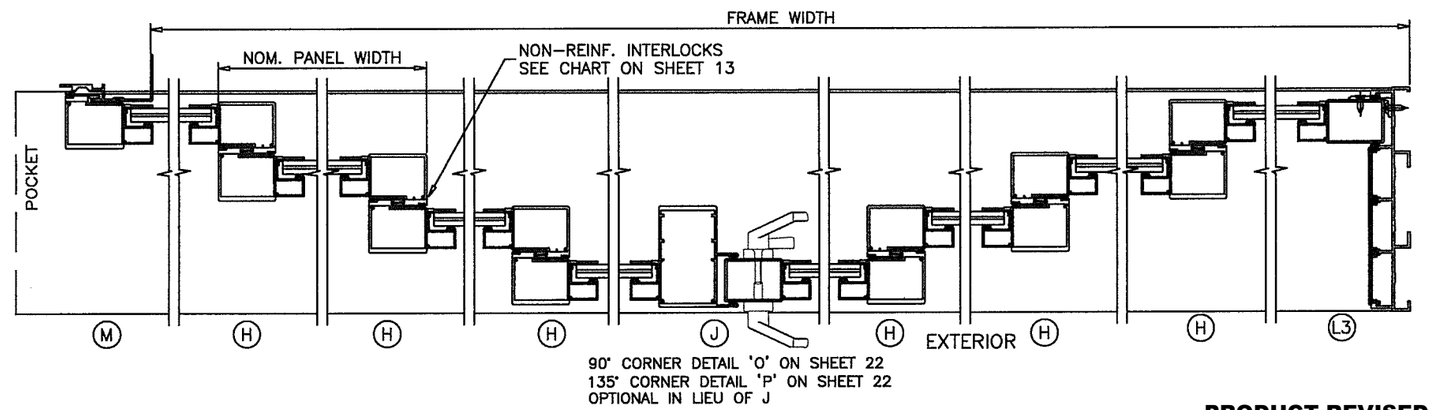

APPROVED CONFIGURATIONS
POCKETED DOORS (NON-REINFORCED SHOWN)
SEE SHEET 13 FOR Dp AND REINFORCING OPTIONS

FOUR (4) TRACKS

POCKETS ARE NOT PART OF THIS APPROVAL AND TO BE REVIEWED BY AHJ.

NOTE:
1. CONFIGURATIONS SHOWN FOR ILLUSTRATION PURPOSES ONLY.
2. FOR APPLICABLE NON REINFORCED OR REINFORCED DESIGN PRESSURES SEE SHEET 13.
3. FOR ANCHOR DETAILS SEE SHEETS 15 THRU 23.
4. DOOR SHALL MEET EGRESS REQUIREMENTS AS APPLICABLE PER FBC.

PRODUCT REVISED
as complying with the Florida Building Code
NOA-No. 20-0729.06
Expiration Date: 09/22/2025
By: Ishaq I. Chanda
Miami-Dade Product Control

Title:	Drawn By:		
SENTINEL 150 ALUM SLIDING GLASS DOOR (L.M.I.)	AGK		
Description: CONFIGURATIONS	Date: 5/22/19		
Revision: NO CHANGES THIS SHEET	Rev. By: AGK	Rev. Date: 7/21/20	
Series/Model: SGD-150 LMI	Scale: N.T.S.	Sheet: 12 OF 28	Drawing No. SGD150LMI-NOA	Rev: A

Impact Resistant Windows & Doors WE'RE STRONGER™
CGI DOORS AND WINDOWS, INC.
3780 W 104TH STREET
HIALEAH, FL 33018
(305) 593-6590

PREPARED BY LYNN MILLER
1070 TECHNOLOGY DRIVE
N. VENICE, FL 34275
(941) 480-1600

REGISTRATION #29296

ANTHONY LYNN MILLER LICENSE No. 58705 STATE OF FLORIDA PROFESSIONAL ENGINEER
7/21/20
A. LYNN MILLER, P.E. P.E.# 58705

GLASS CAPACITY CHARTS

DESIGN LOAD CAPACITY – PSF (GLASS)						
NOM. PANEL WIDTH INCHES	DOOR FRAME HEIGHT INCHES	NUMBER OF PANELS ALLOWED	GLASS TYPES 'A' & 'A1' INTERLOCKS W/O REINF.		GLASS TYPES 'B' & 'B1' INTERLOCKS WITH REINF.	
			EXT.(+)	INT.(–)	EXT.(+)	INT.(–)
24–1/8	82	10	60.0	60.0	80.0	80.0
30–1/8		10	60.0	60.0	80.0	80.0
36–1/8		10	60.0	60.0	80.0	80.0
42–1/8		10	60.0	60.0	80.0	80.0
48–1/8		10	60.0	60.0	80.0	80.0
54–1/8		9	53.3	53.3	71.1	71.1
24–1/8	84	10	60.0	60.0	80.0	80.0
30–1/8		10	60.0	60.0	80.0	80.0
36–1/8		10	60.0	60.0	80.0	80.0
42–1/8		10	60.0	60.0	80.0	80.0
48–1/8		10	60.0	60.0	80.0	80.0
54–1/8		9	53.3	53.3	71.1	71.1
24–1/8	90	10	60.0	60.0	80.0	80.0
30–1/8		10	60.0	60.0	80.0	80.0
36–1/8		10	60.0	60.0	80.0	80.0
42–1/8		10	60.0	60.0	80.0	80.0
48–1/8		9	60.0	60.0	80.0	80.0
24–1/8	96	10	60.0	60.0	80.0	80.0
30–1/8		10	60.0	60.0	80.0	80.0
36–1/8		10	60.0	60.0	80.0	80.0
42–1/8		10	60.0	60.0	80.0	80.0
48–1/8		9	60.0	60.0	80.0	80.0

					GLASS TYPES 'A', 'B', 'A1', 'B1' INTERLOCKS WITH REINF.	
					EXT.(+)	INT.(–)
24–1/8	102	10	–	–	60.0	60.0
30–1/8		10	–	–	60.0	60.0
36–1/8		10	–	–	60.0	60.0
42–1/8		10	–	–	60.0	60.0
48–1/8		10	–	–	60.0	60.0
54–1/8		9	–	–	54.4	54.4
24–1/8	108	10	–	–	60.0	60.0
30–1/8		10	–	–	60.0	60.0
36–1/8		10	–	–	60.0	60.0
42–1/8		10	–	–	60.0	60.0
48–1/8		10	–	–	60.0	60.0
53–1/8		9	–	–	54.4	54.4
24–1/8	114	10	–	–	60.0	60.0
30–1/8		10	–	–	60.0	60.0
36–1/8		10	–	–	60.0	60.0
42–1/8		10	–	–	60.0	60.0
48–1/8		9	–	–	60.0	60.0
24–1/8	120	10	–	–	60.0	60.0
30–1/8		10	–	–	60.0	60.0
36–1/8		10	–	–	60.0	60.0
42–1/8		10	–	–	60.0	60.0
48–1/8		9	–	–	60.0	60.0

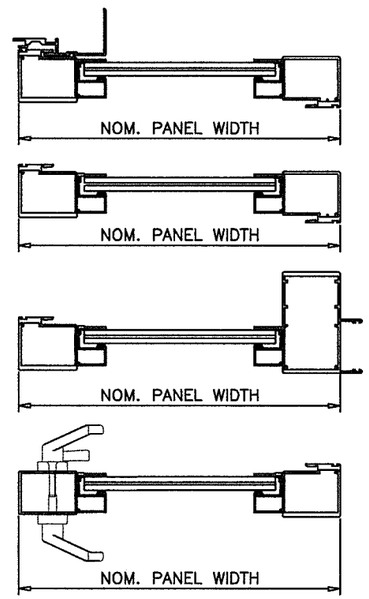

APPLICABLE FBC EGRESS REQUIREMENTS TO BE REVIEWED BY AHJ.

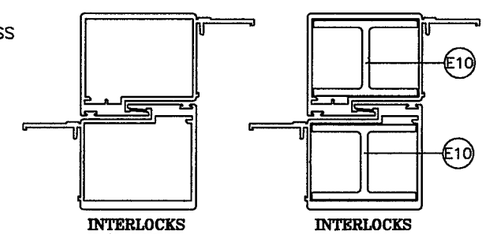

INTERLOCKS W/O REINF. INTERLOCKS WITH REINF.

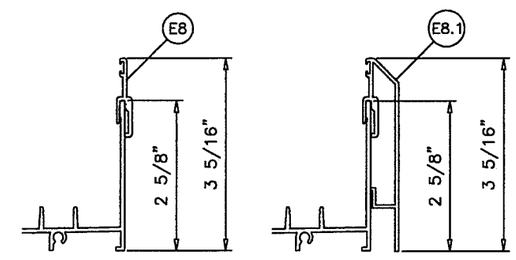

SILL RISER ITEMS E8 OR E8.1 ARE REQUIRED FOR LOADS ABOVE +60.0 PSF ONLY.

NOTE:
GLASS CAPACITIES ON THIS SHEET ARE BASED ON ASTM E1300–09 (3 SEC. GUSTS) AND FLORIDA BUILDING COMMISSION DECLARATORY STATEMENT DCA05–DEC–219

PRODUCT REVISED
as complying with the Florida Building Code
NOA-No. 20-0729.06
Expiration Date: 09/22/2025
By: Ishaq I. Chanda
Miami-Dade Product Control

Title: SENTINEL 150 ALUM SLIDING GLASS DOOR (L.M.I.)			*Drawn By:* AGK	
Description: GLASS CAPACITY CHARTS			*Date:* 5/22/19	
Revision: NO CHANGES THIS SHEET			*Rev. By:* AGK	*Rev. Date:* 7/21/20
Series/Model: SGD-150 LMI	*Scale:* N.T.S.	*Sheet:* 13 OF 28	*Drawing No.* SGD150LMI-NOA	*Rev:* A

Impact Resistant Windows & Doors
WE'RE STRONGER™
CGI DOORS AND WINDOWS, INC.
3780 W 104TH STREET
HIALEAH, FL 33018
(305) 593-6590

PREPARED BY LYNN MILLER
1070 TECHNOLOGY DRIVE
N. VENICE, FL 34275
(941) 480-1600

REGISTRATION #29296

ANTHONY LYNN MILLER LICENSE No. 58705 STATE OF FLORIDA PROFESSIONAL ENGINEER
7/21/20
A. LYNN MILLER, P.E. P.E.# 58705

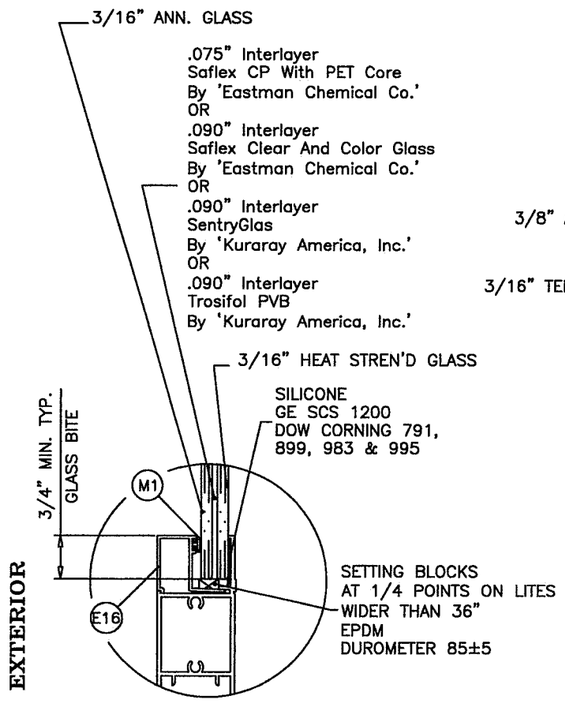

GLASS TYPE 'A'

7/16" OVERALL LAM. GLASS

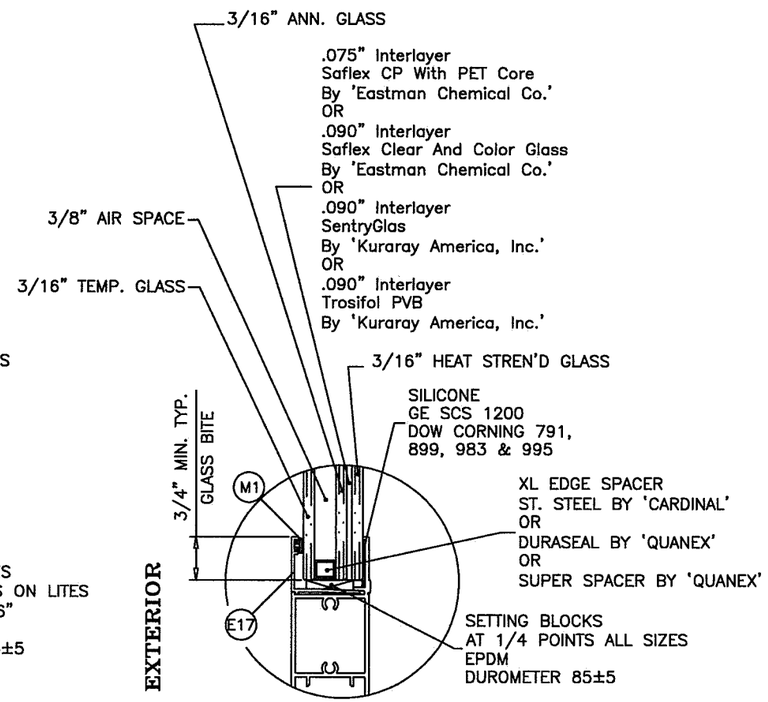

GLASS TYPE 'A1'

1" OVERALL INSUL. LAM. GLASS

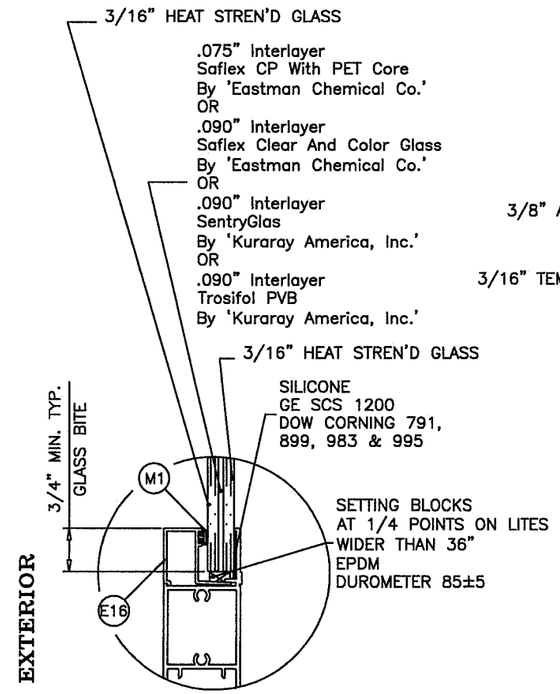

GLASS TYPE 'B'

7/16" OVERALL LAM. GLASS

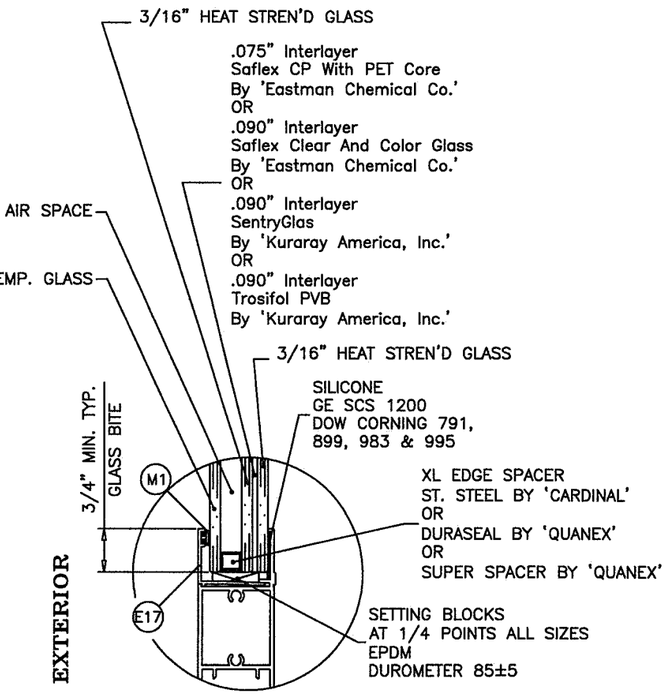

GLASS TYPE 'B1'

1" OVERALL INSUL. LAM. GLASS

GLAZING OPTIONS

PRODUCT REVISED
as complying with the Florida Building Code
NOA-No. 20-0729.06
Expiration Date: 09/22/2025
By: Ishaq I. Chanda
Miami-Dade Product Control

Title: SENTINEL 150 ALUM SLIDING GLASS DOOR (L.M.I.)			*Drawn By:* AGK		Impact Resistant Windows & Doors WE'RE STRONGER™ CGI DOORS AND WINDOWS, INC. 3780 W 104TH STREET HIALEAH, FL 33018 (305) 593-6590
Description: GLAZING DETAILS			*Date:* 5/22/19		
Revision: ADDED BACKBEDDINGS			*Rev. By:* AGK	*Rev. Date:* 7/21/20	PREPARED BY LYNN MILLER 1070 TECHNOLOGY DRIVE N. VENICE, FL 34275 (941) 480-1600
Series/Model: SGD-150 LMI	*Scale:* N.T.S.	*Sheet:* 14 OF 28	*Drawing No.* SGD150LMI-NOA	*Rev:* A	REGISTRATION #29296

ANTHONY LYNN MILLER LICENSE No. 58705 STATE OF FLORIDA PROFESSIONAL ENGINEER
7/21/20

A. LYNN MILLER, P.E. P.E.# 58705

DESIGN LOAD CAPACITY – PSF (ANCHORS)							
		ANCHORS (TYPE A, B & C)			ANCHORS (TYPE B2)		
		CLUSTER AT STILE/INTERLOCK ENDS			CLUSTER AT STILE/INTERLOCK ENDS		
		4	6	8	4	6	8
NOM. PANEL WIDTH INCHES	DOOR FRAME HEIGHT INCHES	EXT.(+) INT.(–)	EXT.(+) INT.(–)	EXT.(+) INT.(–)	EXT.(+) INT.(–)	EXT.(+) INT.(–)	EXT.(+) INT.(–)
24–1/8	82	80.0	–	–	80.0	–	–
30–1/8		80.0	–	–	80.0	–	–
36–1/8		80.0	–	–	76.2	80.0	–
42–1/8		72.4	80.0	–	68.7	80.0	–
48–1/8		66.8	80.0	–	63.4	80.0	–
54–1/8		62.8	71.1	–	59.5	71.1	71.1
24–1/8	84	80.0	–	–	80.0	–	–
30–1/8		80.0	–	–	80.0	–	–
36–1/8		75.5	80.0	–	71.6	80.0	–
42–1/8		67.8	80.0	–	64.3	80.0	–
48–1/8		62.3	80.0	–	59.1	80.0	80.0
54–1/8		58.4	71.1	71.1	55.3	71.1	71.1
24–1/8	90	80.0	–	–	80.0	–	–
30–1/8		79.7	80.0	–	75.6	80.0	–
36–1/8		69.2	80.0	–	65.6	80.0	–
42–1/8		61.9	80.0	–	58.7	80.0	80.0
48–1/8		56.7	80.0	80.0	53.7	80.0	80.0
24–1/8	96	80.0	–	–	80.0	–	–
30–1/8		73.8	80.0	–	69.9	80.0	–
36–1/8		63.9	80.0	–	60.6	80.0	–
42–1/8		57.0	80.0	80.0	54.0	80.0	80.0
48–1/8		51.9	77.9	80.0	49.3	73.9	80.0
24–1/8	102	60.0	–	–	60.0	–	–
30–1/8		60.0	–	–	60.0	–	–
36–1/8		59.3	60.0	60.0	56.2	60.0	60.0
42–1/8		52.7	60.0	60.0	50.0	60.0	60.0
48–1/8		47.9	60.0	60.0	45.5	60.0	60.0
54–1/8		44.3	54.4	54.4	42.0	54.4	54.4
24–1/8	108	60.0	–	–	60.0	–	–
30–1/8		60.0	–	–	60.0	–	–
36–1/8		55.3	60.0	60.0	52.5	60.0	60.0
42–1/8		49.1	60.0	60.0	46.6	60.0	60.0
48–1/8		44.5	60.0	60.0	42.2	60.0	60.0
54–1/8		41.6	54.4	54.4	39.4	54.4	54.4
24–1/8	114	60.0	–	–	60.0	–	–
30–1/8		60.0	–	–	57.2	60.0	60.0
36–1/8		51.9	60.0	60.0	49.2	60.0	60.0
42–1/8		45.9	60.0	60.0	43.6	60.0	60.0
48–1/8		41.5	60.0	60.0	39.4	59.1	60.0
24–1/8	120	60.0	–	–	60.0	–	–
30–1/8		56.9	60.0	60.0	54.0	60.0	60.0
36–1/8		48.8	60.0	60.0	46.3	60.0	60.0
42–1/8		43.1	60.0	60.0	40.9	60.0	60.0
48–1/8		38.9	58.4	60.0	36.9	55.4	60.0

INTERPOLATION BETWEEN WIDTHS AND HEIGHTS ACCEPTABLE

NOTE:
ANCHOR CAPACITIES LISTED ON THIS SHEET TO BE USED IN CONJUNCTION WITH GLASS CHARTS ON SHEET 13 LOWER APPLICABLE VALUES CONTROL. 3 TRACK SYSTEM SHOWN ALSO APPLICABLE TO 2 AND 4 TRACK FRAMES. PLEASE SEE FOLLOWING SHEETS FOR DETAILS.

LIMIT EXT.(+) LOADS TO 60.0 PSF FOR DOORS W/O REINFORCING ALL SIZES
LIMIT EXT.(+) LOADS TO 80.0 PSF FOR DOORS W/ REINF. UPTO 96 IN. HT.
LIMIT EXT.(+) LOADS TO 60.0 PSF FOR DOORS W/ REINF. ABOVE 96 IN. HT. UPTO 120 IN. HIGH.

WOOD BUCKS AND METAL STRUCTURES NOT BY CGI WINDOWS MUST SUSTAIN LOADS IMPOSED BY GLAZING SYSTEM AND TRANSFER THEM TO THE BUILDING STRUCTURE.

TYPICAL ANCHORS: SEE ELEV. FOR SPACING

AT HEAD OR JAMBS

TYPE 'A'– 1/4" ULTRACON BY 'ELCO' (Fu=177 KSI, Fy=155 KSI)
THRU 1BY BUCKS OR DIRECTLY INTO CONCRETE
1–1/4" MIN. EMBED INTO CONCRETE

THRU 1BY BUCKS OR DIRECTLY INTO MASONRY
1–1/4" MIN. EMBED MASONRY (@ JAMBS)

INTO 2BY WOOD BUCKS OR WOOD STRUCTURES
1–1/2" MIN. PENETRATION INTO WOOD

AT HEAD, SILL & JAMBS

TYPE 'A'– 1/4" KWIK–CON II+ BY 'HILTI' (Fu=138 KSI, Fy=137 KSI)
INTO 2BY WOOD BUCKS OR WOOD STRUCTURES
1–3/8" MIN. PENETRATION INTO WOOD

AT HEAD OR JAMBS

TYPE 'B'– 1/4" ULTRACON BY 'ELCO' (Fu=177 KSI, Fy=155 KSI)
THRU 1BY BUCKS OR DIRECTLY INTO CONCRETE
2" MIN. EMBED INTO CONCRETE (@ HEAD)
1–1/4" MIN. EMBED INTO CONCRETE OR MASONRY (@ JAMBS)

1/4" ULTRACON+ BY 'DEWALT' (Fu=164 KSI, Fy=148 KSI)
THRU 1BY BUCKS OR DIRECTLY INTO CONCRETE
1–3/4" MIN. EMBED INTO CONCRETE
1–1/4" MIN. EMBED INTO CONCRETE OR MASONRY (@ JAMBS)

AT HEAD OR JAMBS

TYPE 'C'– 1/4" DIA. SELF DRILLING SCREWS (GRADE 5 CRS)
INTO MIAMI–DADE COUNTY APPROVED MULLIONS
OR
INTO METAL STRUCTURES (HEAD/SILL/JAMBS)
(3) THREADS MIN. PENETRATION BEYOND SUBSTRATE
ALUMINUM: 1/8" THK. MIN. (6063–T5 MIN.)
STEEL: 1/8" THK. MIN. (Fy = 36 KSI MIN.)
(STEEL IN CONTACT WITH ALUMINUM TO BE PLATED OR PAINTED)

AT SILL

TYPE 'B2'– 1/4" DIA. ULTRACON BY 'ELCO' (Fu=177 KSI, Fy=155 KSI)
1/4" DIA. ULTRACON+ BY 'DEWALT' (Fu=164 KSI, Fy=148 KSI)
DIRECTLY INTO CONCRETE
1–3/4" MIN. EMBED INTO CONCRETE

1/4" KWIK–CON II+ BY 'HILTI' (Fu=138 KSI, Fy=137 KSI)
INTO 2BY WOOD BUCKS OR WOOD STRUCTURES
1–3/8" MIN. PENETRATION INTO WOOD

DEWALT ULTRACON+ AND HILTI KWIK–CON II+ ANCHORS LIMITED TO A MAX. SHIM SPACE OF 1/4".

ANCHOR EDGE DISTANCES
INTO CONCRETE OR MASONRY = 2–1/2" MIN.
INTO WOOD STRUCTURE = 1" MIN.
INTO METAL STRUCTURE = 3/4" MIN.

WOOD AT HEAD OR JAMBS SG = 0.55 MIN.
CONCRETE AT HEAD, SILL OR JAMBS f'c = 3000 PSI MIN.
C–90 HOLLOW/FILLED BLOCK AT JAMBS f'm = 2000 PSI MIN.

PRODUCT REVISED
as complying with the Florida Building Code
NOA–No. 20-0729.06
Expiration Date: 09/22/2025
By: Ishaq I. Chanda
Miami–Dade Product Control

INSTALLATION CONDITIONS SHOWN APPLY TO BOTH 2 TRACK AND 3 TRACK SYSTEMS WITH STD. FRAME HEAD AND SILL.

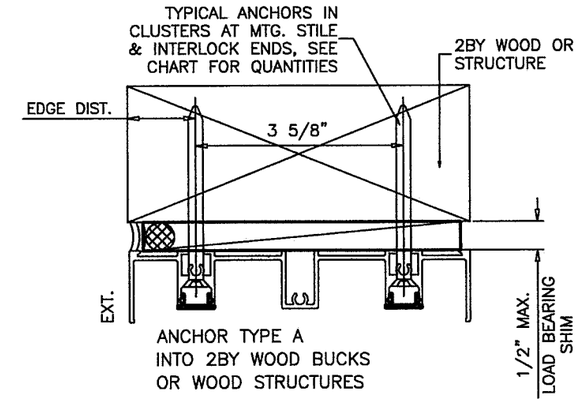

ANCHOR TYPE A
INTO 2BY WOOD BUCKS
OR WOOD STRUCTURES

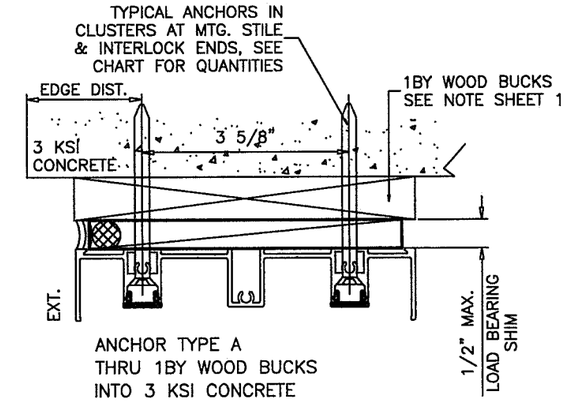

ANCHOR TYPE A
THRU 1BY WOOD BUCKS
INTO 3 KSI CONCRETE

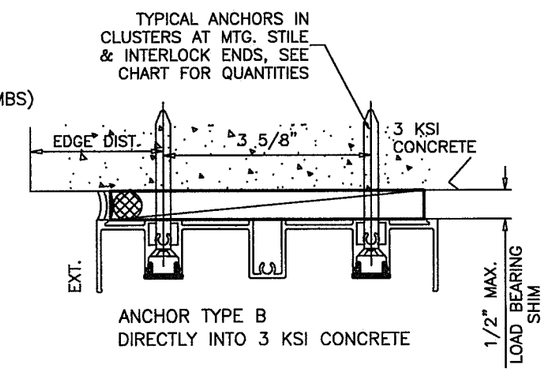

ANCHOR TYPE B
DIRECTLY INTO 3 KSI CONCRETE

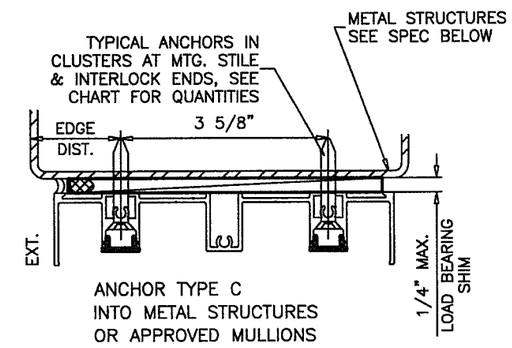

ANCHOR TYPE C
INTO METAL STRUCTURES
OR APPROVED MULLIONS

POURED & HARDENED, NON–METALIC, NON–SHRINKAGE HIGH–STRENGTH GROUT; f'c = 5000 PSI MIN.
NOT BY CGI; MUST TRANSFER SHEAR LOADS TO STRUCTURE

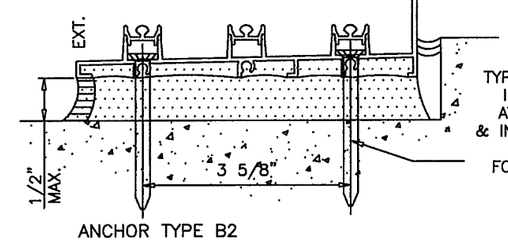

ANCHOR TYPE B2
DIRECTLY INTO 3 KSI CONCRETE

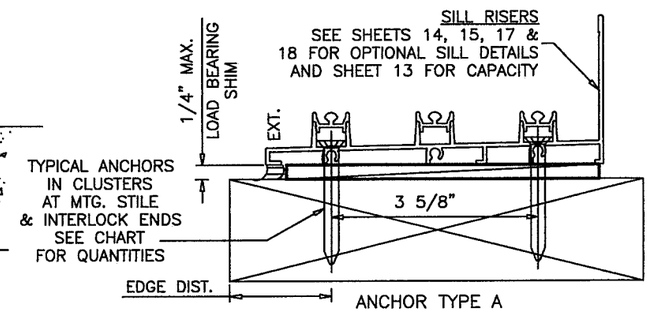

ANCHOR TYPE A
INTO 2BY WOOD BUCKS
OR WOOD STRUCTURES

Title:	Drawn By:
SENTINEL 150 ALUM SLIDING GLASS DOOR (L.M.I.)	AGK
Description: ANCHOR LOAD CHART/ANCHOR DETAILS	Date: 5/22/19
Revision: ADDED ANCHORS AND RE-FORMATTED SHEET	Rev. By: AGK / Rev. Date: 7/21/20

Series/Model:	Scale:	Sheet:	Drawing No.	Rev:
SGD-150 LMI	N.T.S.	15 OF 28	SGD150LMI-NOA	A

Impact Resistant Windows & Doors
WE'RE STRONGER™
CGI DOORS AND WINDOWS, INC.
3780 W 104TH STREET
HIALEAH, FL 33018
(305) 593-6590

PREPARED BY LYNN MILLER
1070 TECHNOLOGY DRIVE
N. VENICE, FL 34275
(941) 480-1600
REGISTRATION #29296

ANTHONY LYNN MILLER
LICENSE
No. 58705
7/21/20
STATE OF FLORIDA
PROFESSIONAL ENGINEER
A. LYNN MILLER, P.E. P.E.# 58705

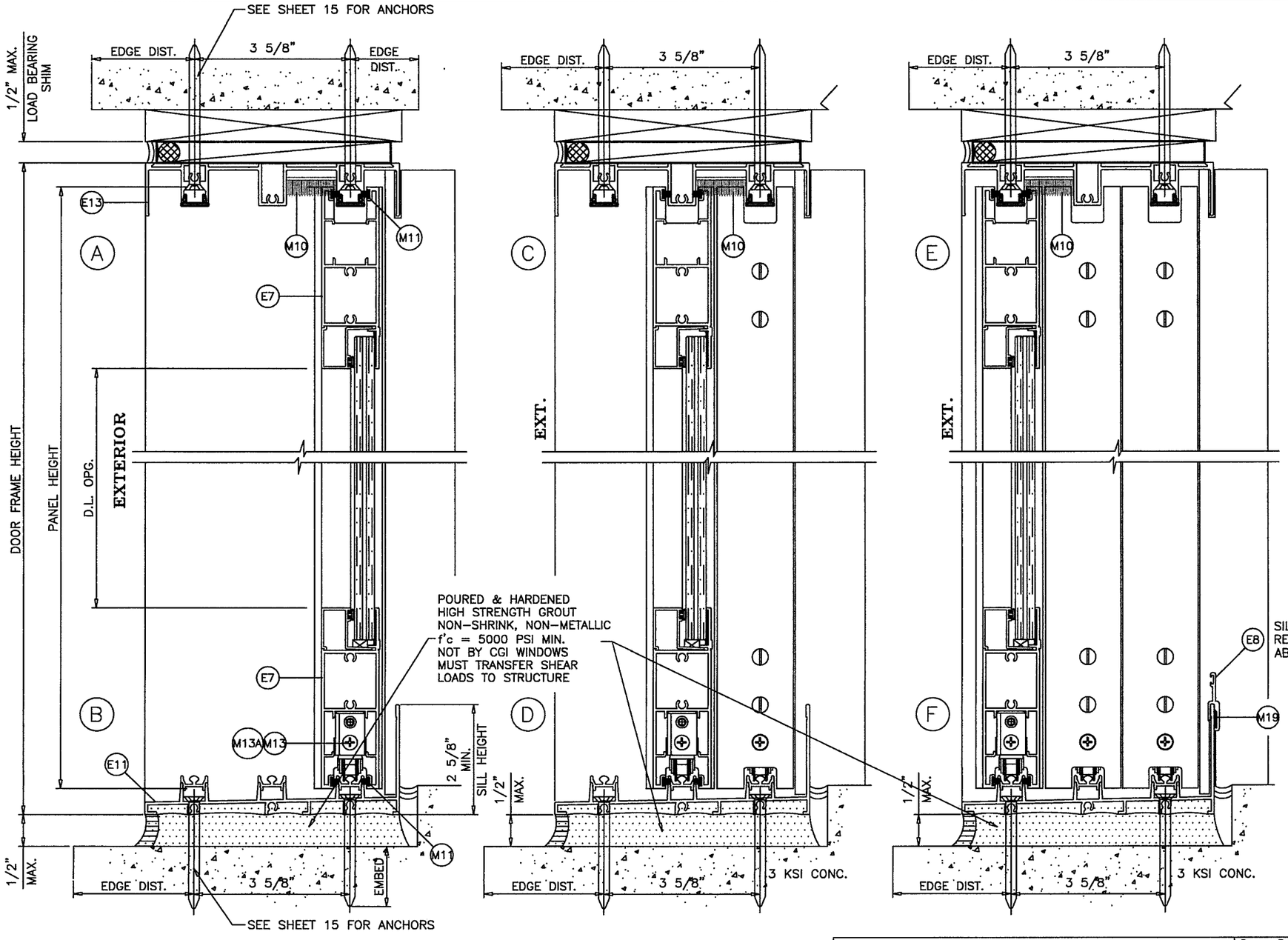

WEEP SIZE 1/4" X 1/8"

REFER TO SHEET 15 FOR VARIOUS INSTALLATION CONDITIONS.

OPTIONAL SLANT SILL ADAPTORS

PRODUCT REVISED
as complying with the Florida Building Code
NOA-No. 20-0729.06
Expiration Date: 09/22/2025
By: Ishaq I. Chanda
Miami-Dade Product Control

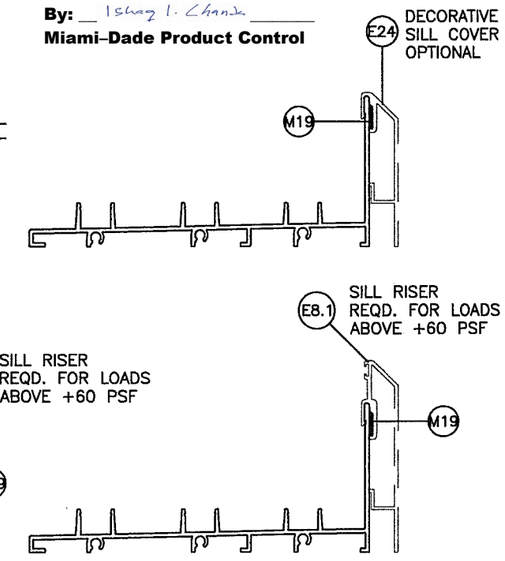

THREE (3) TRACK DOOR DETAILS

Title:	Drawn By:		
SENTINEL 150 ALUM SLIDING GLASS DOOR (L.M.I.)	AGK		
Description:	Date:		
3-TRACK DOOR DETAILS	5/22/19		
Revision:	Rev. By:	Rev. Date:	
NO CHANGES THIS SHEET	AGK	7/21/20	

Series/Model:	Scale:	Sheet:	Drawing No.	Rev:
SGD-150 LMI	N.T.S.	16 OF 28	SGD150LMI-NOA	A

Impact Resistant Windows & Doors
WE'RE STRONGER™
CGI DOORS AND WINDOWS, INC.
3780 W 104TH STREET
HIALEAH, FL 33018
(305) 593-6590

PREPARED BY LYNN MILLER
1070 TECHNOLOGY DRIVE
N. VENICE, FL 34275
(941) 480-1600

REGISTRATION #29296

ANTHONY LYNN MILLER
LICENSE
No. 58705
STATE OF FLORIDA
PROFESSIONAL ENGINEER
7/21/20

A. LYNN MILLER, P.E. P.E.# 58705

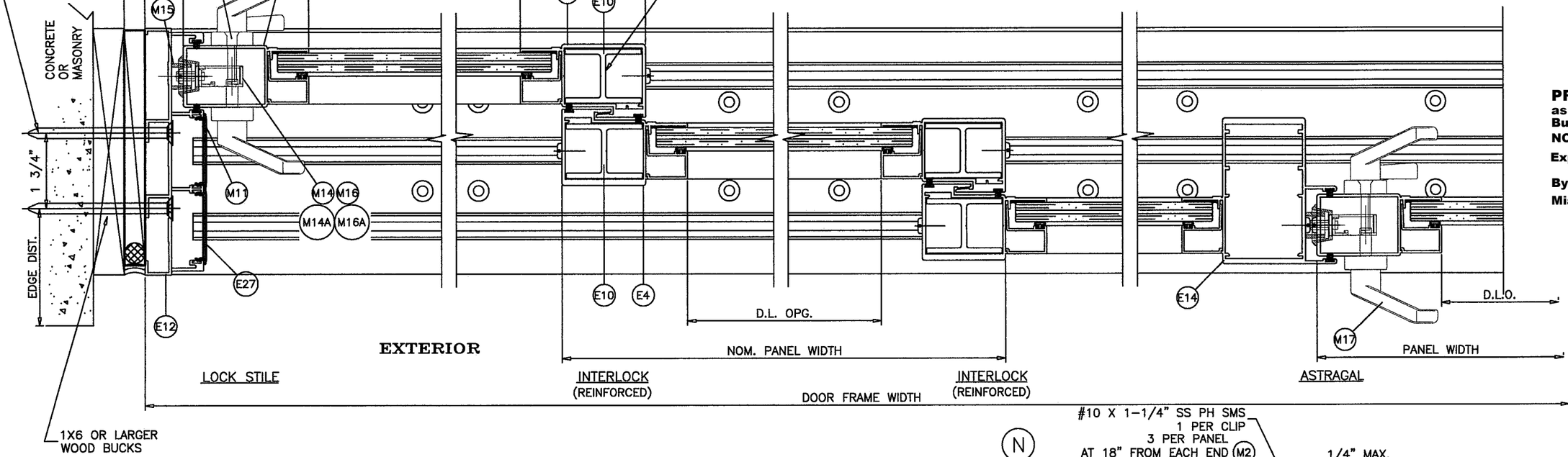

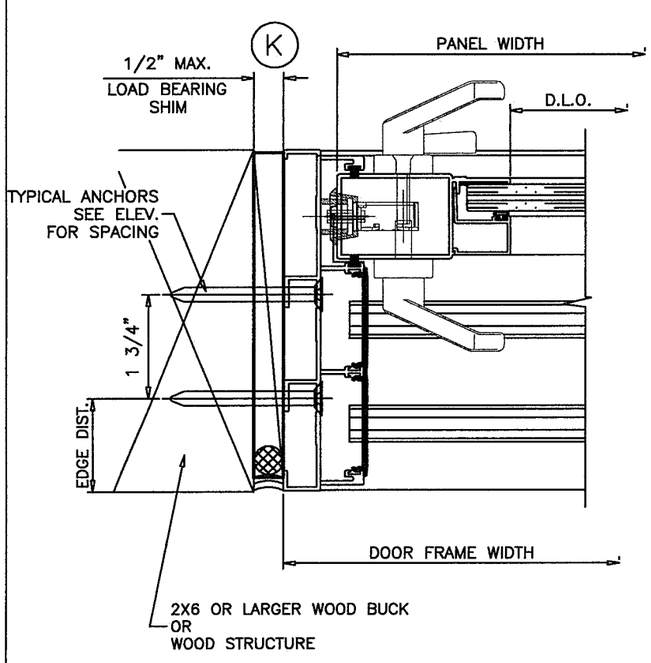

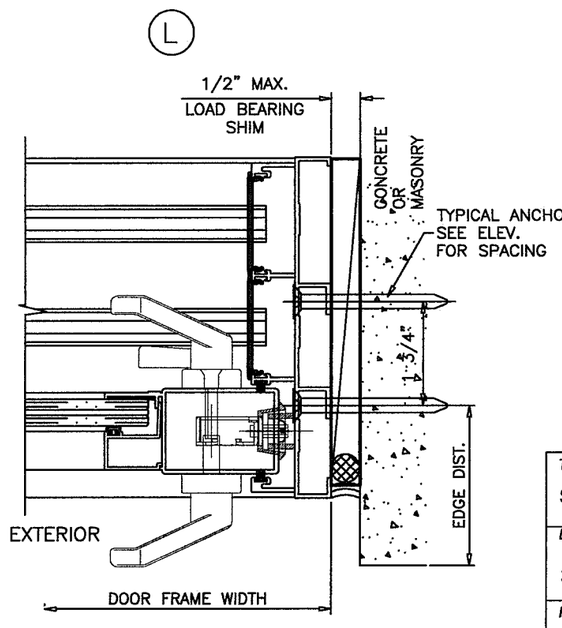

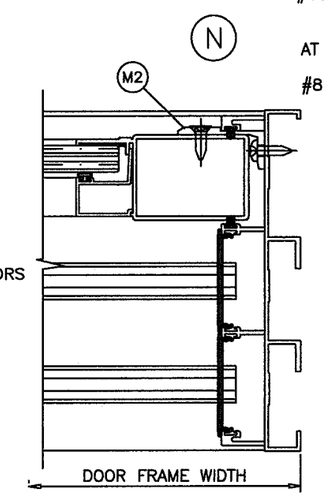

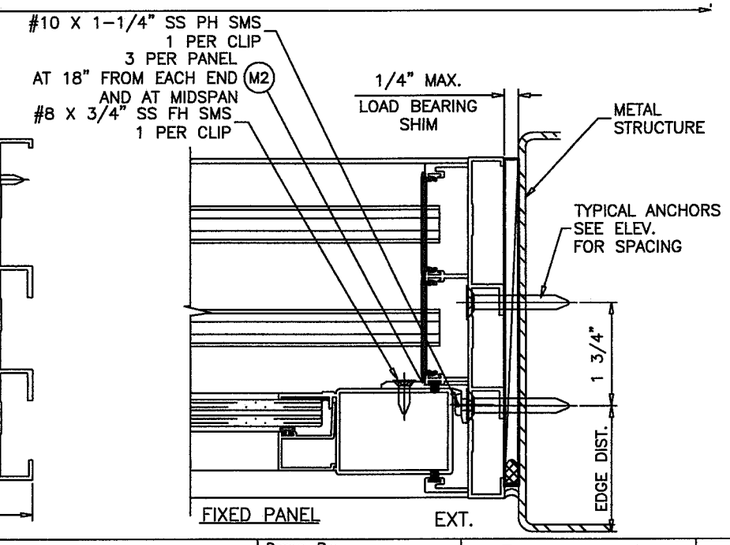

PRODUCT REVISED
as complying with the Florida Building Code
NOA-No. 20-0729.06
Expiration Date: 09/22/2025
By: Ishaq I. Chanda
Miami-Dade Product Control

THREE (3) TRACK DOOR DETAILS

Title: SENTINEL 150 ALUM SLIDING GLASS DOOR (L.M.I.)			Drawn By: AGK	
Description: 3-TRACK DOOR DETAILS			Date: 5/22/19	
Revision: NO CHANGES THIS SHEET			Rev. By: AGK	Rev. Date: 7/21/20
Series/Model: SGD-150 LMI	Scale: N.T.S.	Sheet: 17 OF 28	Drawing No. SGD150LMI-NOA	Rev: A

Impact Resistant Windows & Doors
WE'RE STRONGER™
CGI DOORS AND WINDOWS, INC.
3780 W 104TH STREET
HIALEAH, FL 33018
(305) 593-6590

PREPARED BY LYNN MILLER
1070 TECHNOLOGY DRIVE
N. VENICE, FL 34275
(941) 480-1600

REGISTRATION #29296

ANTHONY LYNN MILLER LICENSE No. 58705 STATE OF FLORIDA PROFESSIONAL ENGINEER
7/21/20
A. LYNN MILLER, P.E. P.E.# 58705

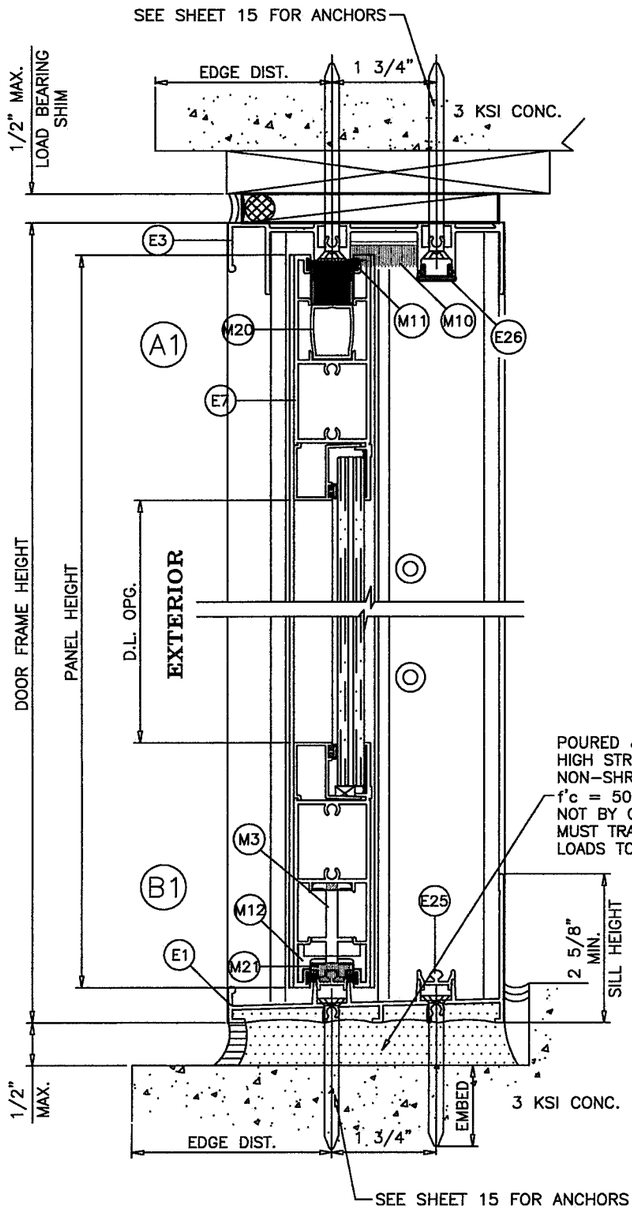

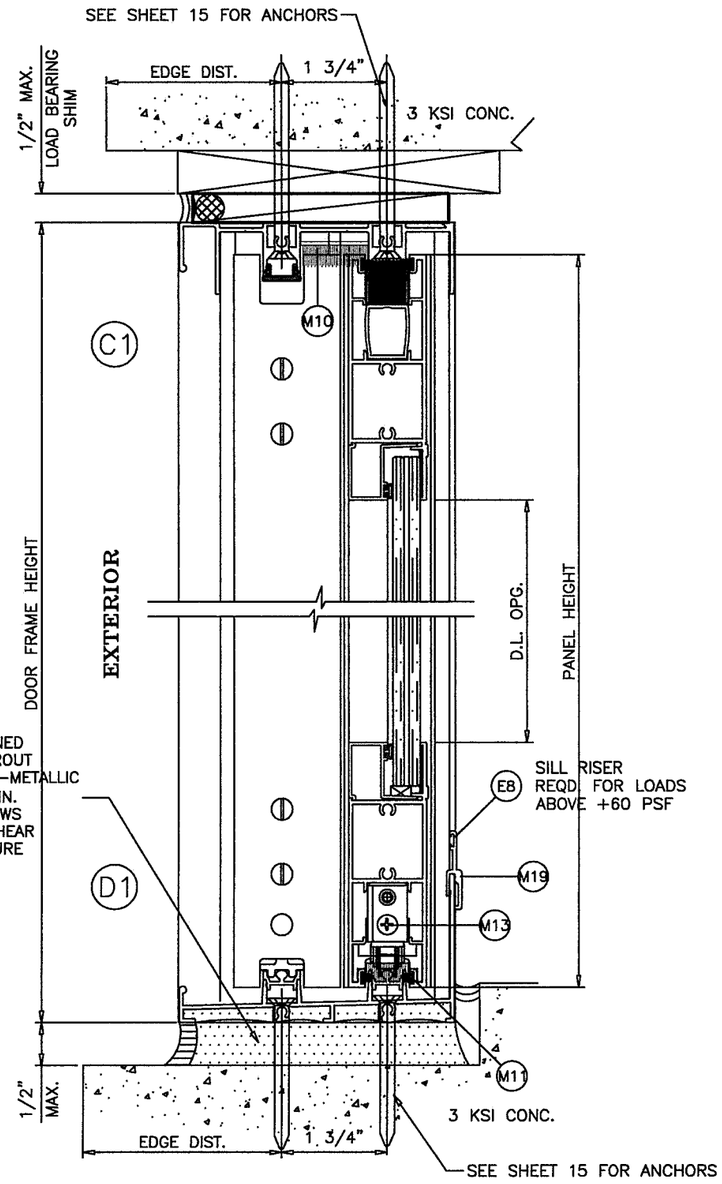

WEEP SIZE 1/4" X 1/8"

REFER TO SHEET 15 FOR VARIOUS INSTALLATION CONDITIONS.

OPTIONAL SLANT SILL ADAPTORS

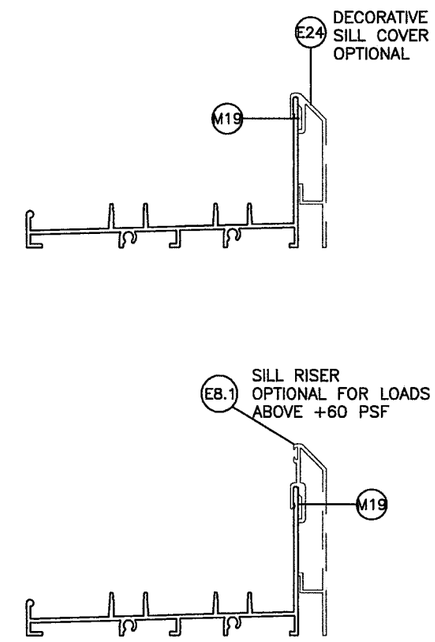

PRODUCT REVISED
as complying with the Florida Building Code
NOA-No. 20-0729.06
Expiration Date: 09/22/2025
By: Ishaq I. Chanda
Miami-Dade Product Control

TWO (2) TRACK DOOR DETAILS

Title: SENTINEL 150 ALUM SLIDING GLASS DOOR (L.M.I.)			Drawn By: AGK		Impact Resistant Windows & Doors WE'RE STRONGER™ CGI DOORS AND WINDOWS, INC. 3780 W 104TH STREET HIALEAH, FL 33018 (305) 593-6590
Description: 2-TRACK DOOR DETAILS			Date: 5/22/19		
Revision: NO CHANGES THIS SHEET			Rev. By: AGK	Rev. Date: 7/21/20	PREPARED BY LYNN MILLER 1070 TECHNOLOGY DRIVE N. VENICE, FL 34275 (941) 480-1600
Series/Model: SGD150A	Scale: N.T.S.	Sheet: 18 OF 28	Drawing No. SGD150LMI-NOA	Rev: A	REGISTRATION #29296

ANTHONY LYNN MILLER LICENSE No. 58705 STATE OF FLORIDA PROFESSIONAL ENGINEER
7/21/20

A. LYNN MILLER, P.E. P.E.# 58705

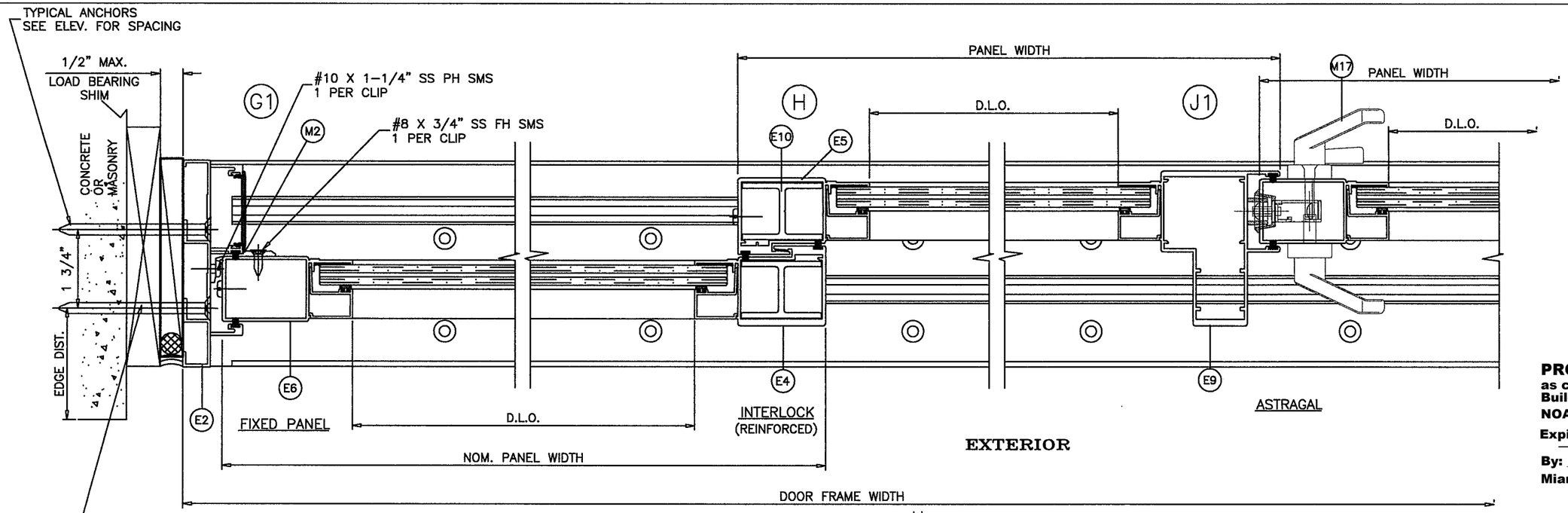

PRODUCT REVISED
as complying with the Florida Building Code
NOA-No. 20-0729.06
Expiration Date: 09/22/2025
By: Ishaq I. Chanda
Miami-Dade Product Control

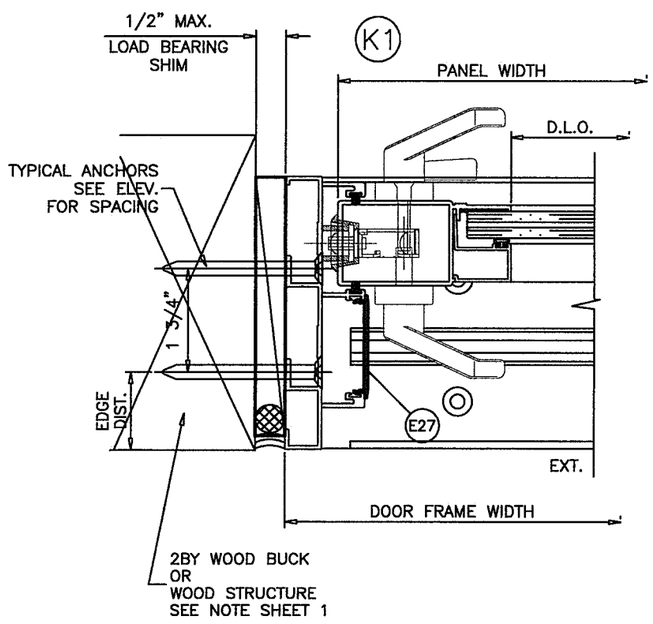

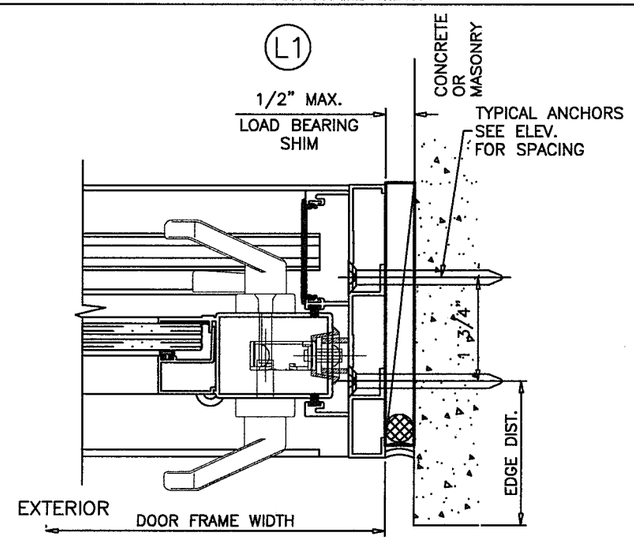

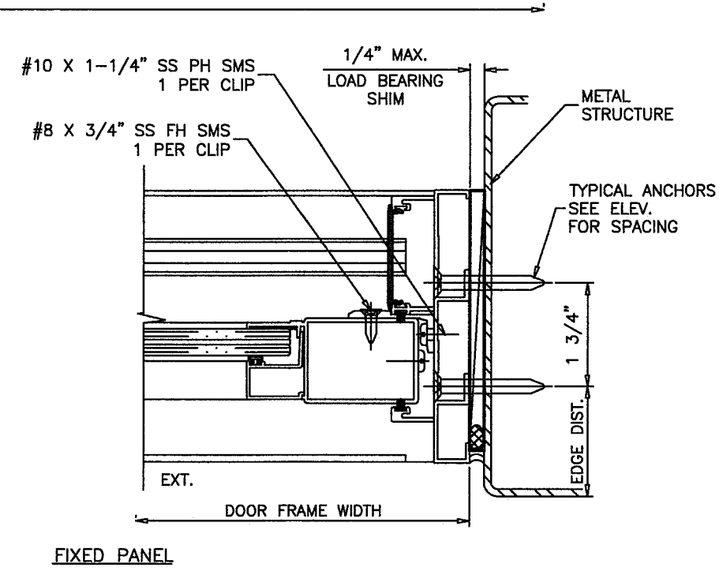

TWO (2) TRACK DOOR DETAILS

Title:	Drawn By:
SENTINEL 150 ALUM SLIDING GLASS DOOR (L.M.I.)	AGK
Description: 2-TRACK DOOR DETAILS	**Date:** 5/22/19
Revision: NO CHANGES THIS SHEET	**Rev. By:** AGK **Rev. Date:** 7/21/20

Series/Model:	Scale:	Sheet:	Drawing No.	Rev:
SGD-150 LMI	N.T.S.	19 OF 28	SGD150LMI-NOA	A

Impact Resistant Windows & Doors
WE'RE STRONGER™
CGI DOORS AND WINDOWS, INC.
3780 W 104TH STREET
HIALEAH, FL 33018
(305) 593-6590

PREPARED BY LYNN MILLER
1070 TECHNOLOGY DRIVE
N. VENICE, FL 34275
(941) 480-1600

REGISTRATION #29296

ANTHONY LYNN MILLER
LICENSE
No. 58705
7/21/20
STATE OF FLORIDA
PROFESSIONAL ENGINEER

A. LYNN MILLER, P.E. P.E.# 58705

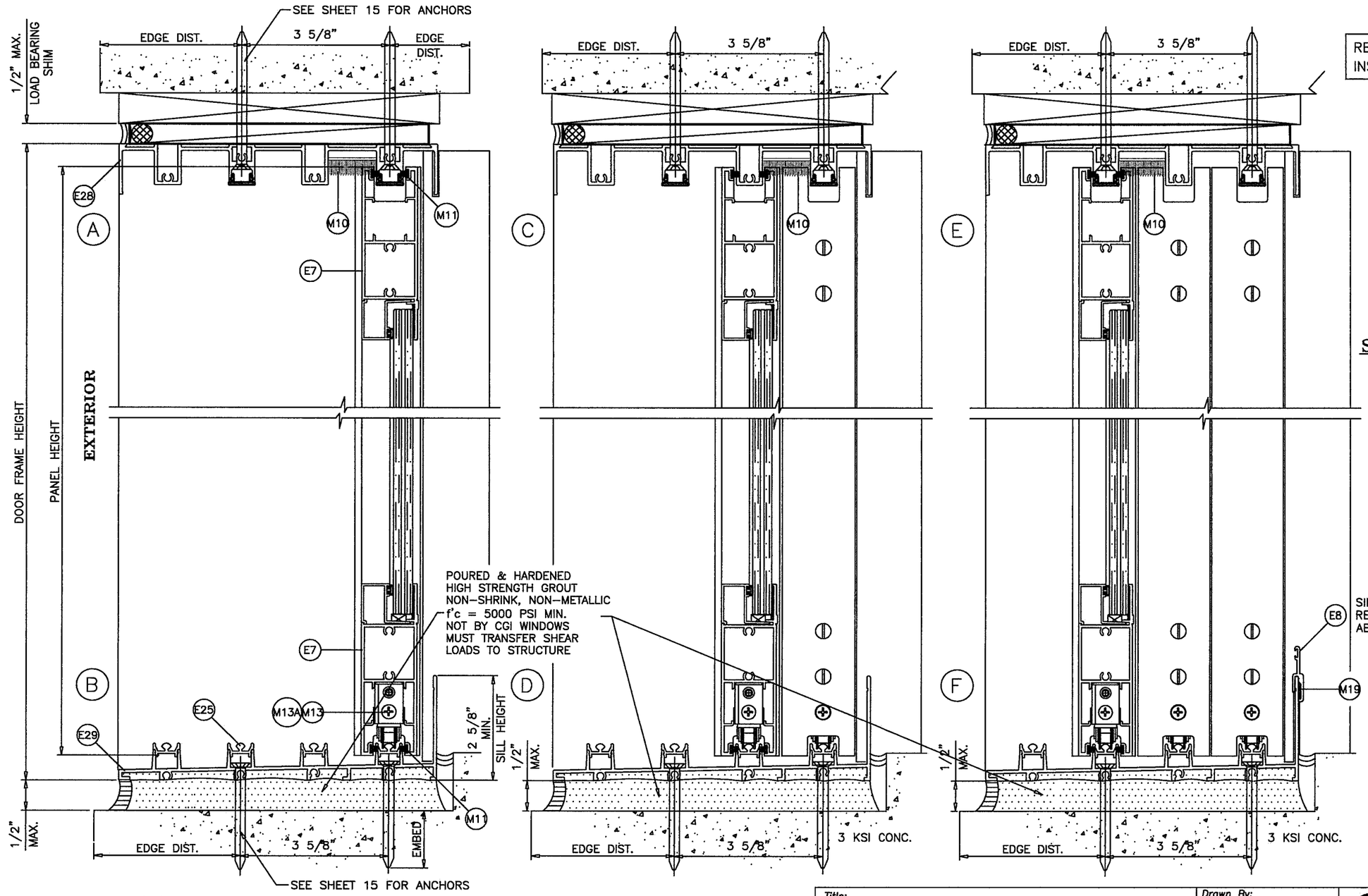

FOUR (4) TRACK DOOR DETAILS

REFER TO SHEET 15 FOR VARIOUS INSTALLATION CONDITIONS.

WEEP SIZE 1/4" X 1/8"

OPTIONAL SLANT SILL ADAPTORS

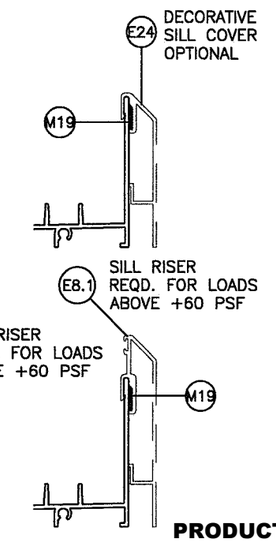

PRODUCT REVISED
as complying with the Florida Building Code
NOA-No. 20-0729.06
Expiration Date: 09/22/2025
By: Ishwar I. Chanda
Miami-Dade Product Control

Title:	Drawn By:		
SENTINEL 150 ALUM SLIDING GLASS DOOR (L.M.I.)	AGK		
Description:	Date:		
4-TRACK DOOR DETAILS	5/22/19		
Revision:	Rev. By:	Rev. Date:	
NO CHANGES THIS SHEET	AGK	7/21/20	

Series/Model:	Scale:	Sheet:	Drawing No.	Rev:
SGD-150 LMI	N.T.S.	20 OF 28	SGD150LMI-NOA	A

Impact Resistant Windows & Doors
WE'RE STRONGER™
CGI DOORS AND WINDOWS, INC.
3780 W 104TH STREET
HIALEAH, FL 33018
(305) 593-6590

PREPARED BY LYNN MILLER
1070 TECHNOLOGY DRIVE
N. VENICE, FL 34275
(941) 480-1600

REGISTRATION #29296

ANTHONY LYNN MILLER
LICENSE
No. 58705
STATE OF FLORIDA
PROFESSIONAL ENGINEER
7/21/20

A. LYNN MILLER, P.E. P.E.# 58705

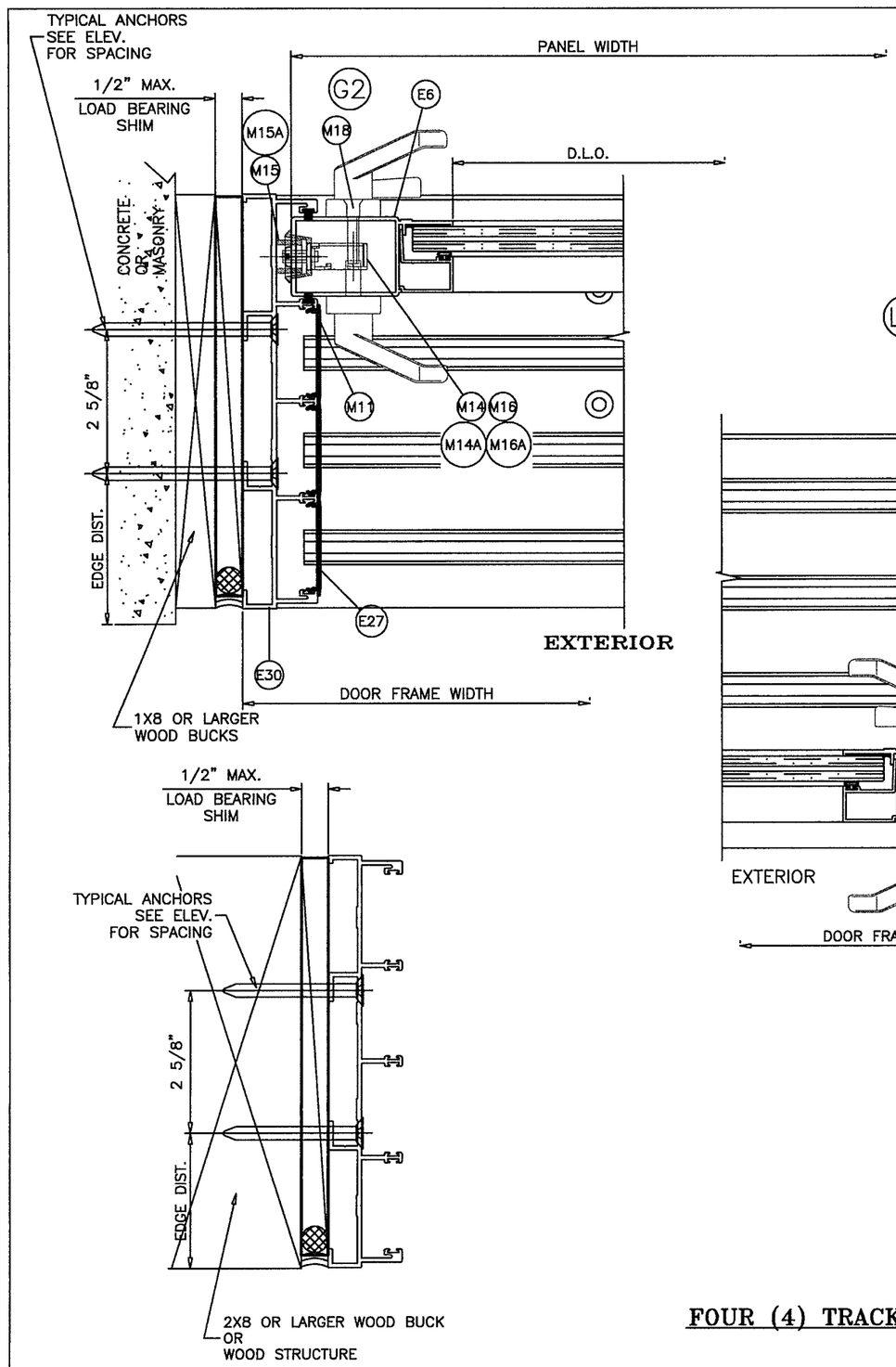

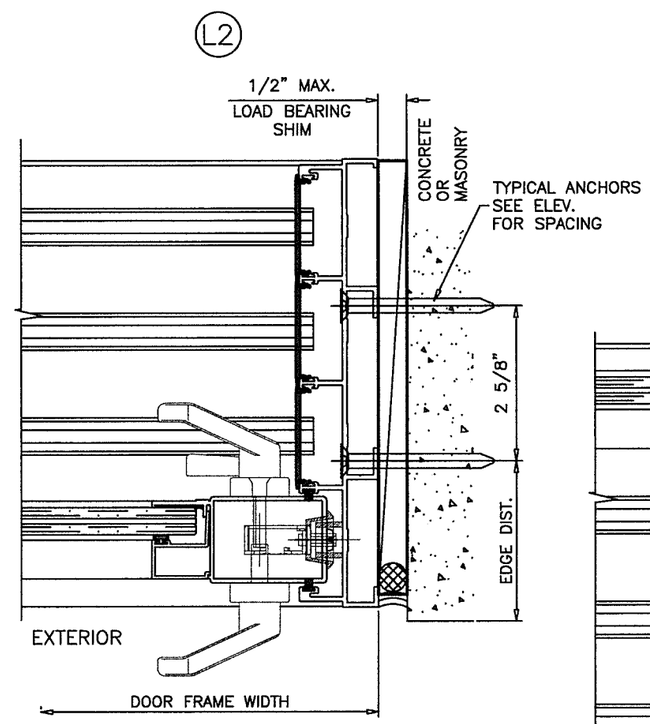

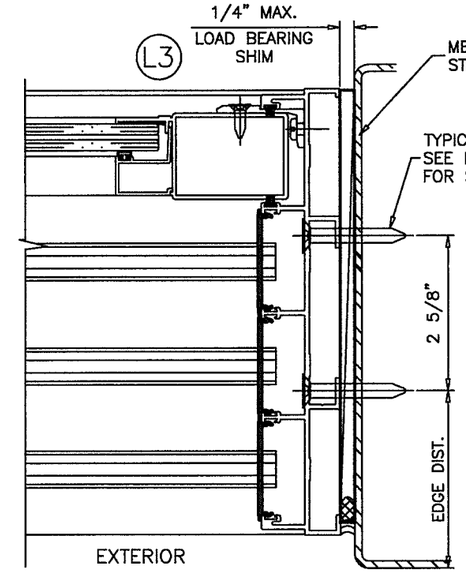

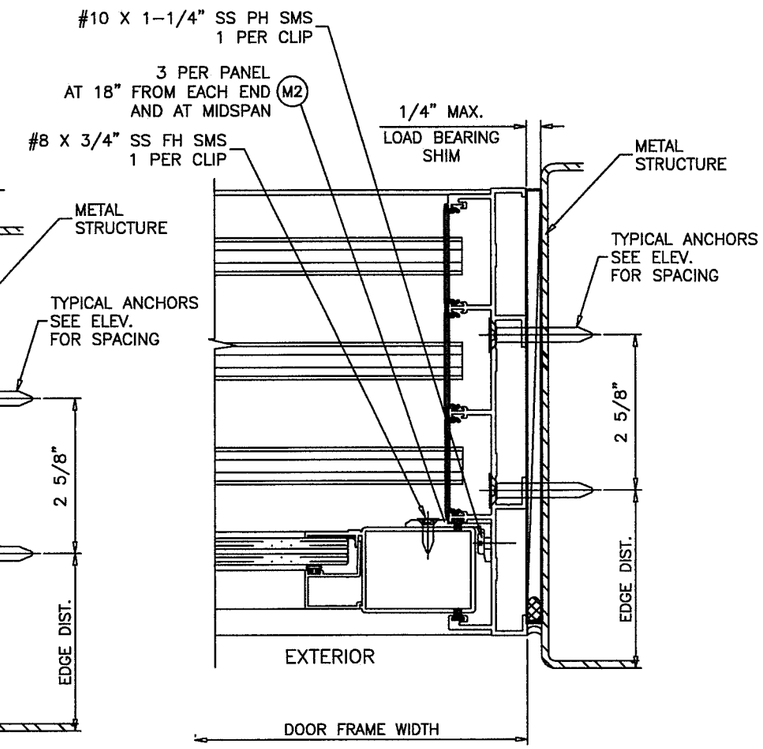

PRODUCT REVISED
as complying with the Florida Building Code
NOA-No. 20-0729.06
Expiration Date: 09/22/2025
By: Ishaq I. Chanda
Miami-Dade Product Control

FOUR (4) TRACK DOOR DETAILS

Title: SENTINEL 150 ALUM SLIDING GLASS DOOR (L.M.I.)			*Drawn By:* AGK		Impact Resistant Windows & Doors WE'RE STRONGER™ CGI DOORS AND WINDOWS, INC. 3780 W 104TH STREET HIALEAH, FL 33018 (305) 593-6590
Description: 4-TRACK DOOR DETAILS			*Date:* 5/22/19		
Revision: NO CHANGES THIS SHEET			*Rev. By:* AGK	*Rev. Date:* 7/21/20	PREPARED BY LYNN MILLER 1070 TECHNOLOGY DRIVE N. VENICE, FL 34275 (941) 480-1600
Series/Model: SGD-150 LMI	*Scale:* N.T.S.	*Sheet:* 21 OF 28	*Drawing No.* SGD150LMI-NOA	*Rev:* A	REGISTRATION #29296

ANTHONY LYNN MILLER LICENSE No. 58705 STATE OF FLORIDA PROFESSIONAL ENGINEER
7/21/20
A. LYNN MILLER, P.E. P.E.# 58705

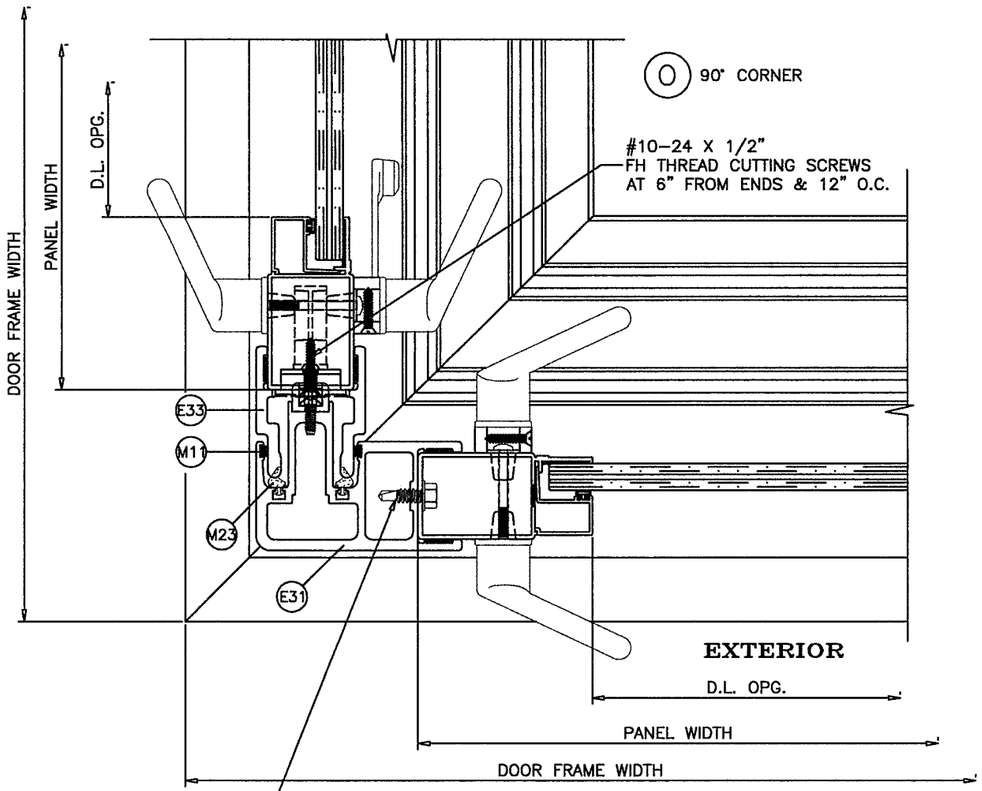

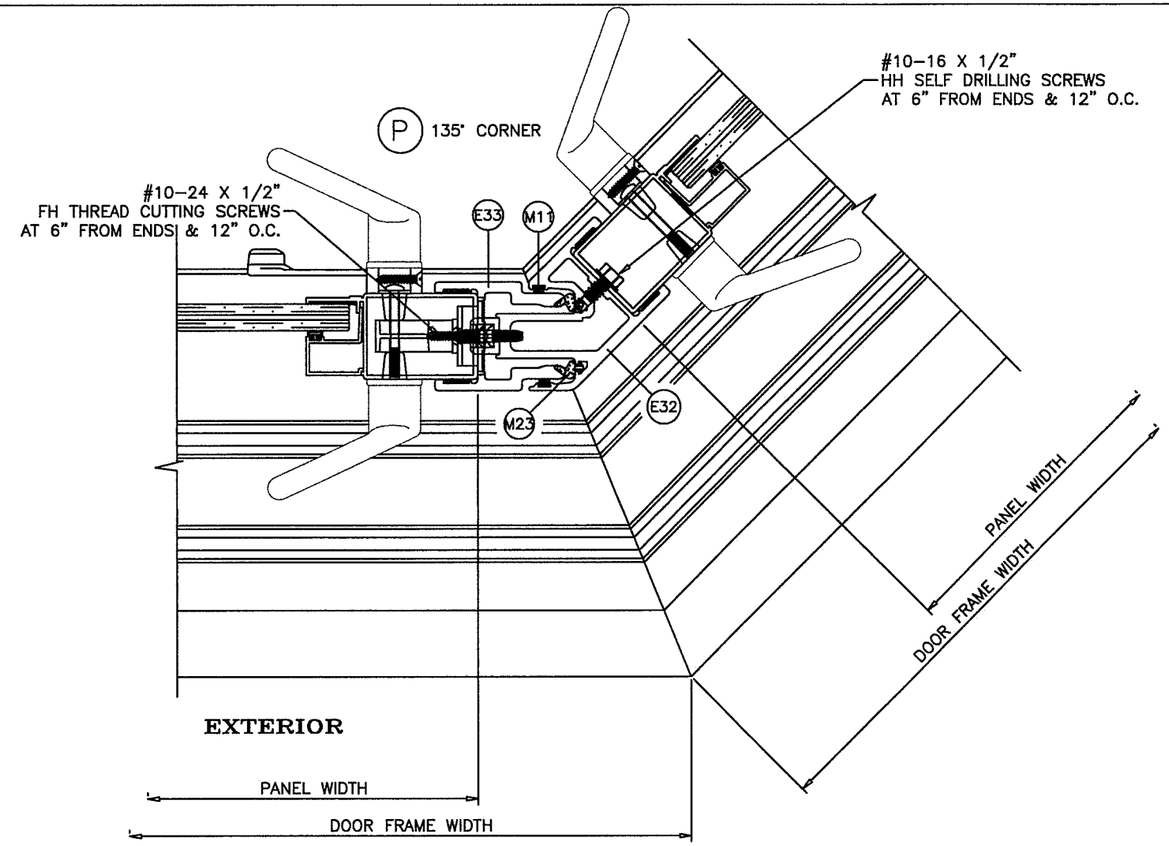

DETAILS APPLICABLE FOR OUTSIDE CORNERS ONLY

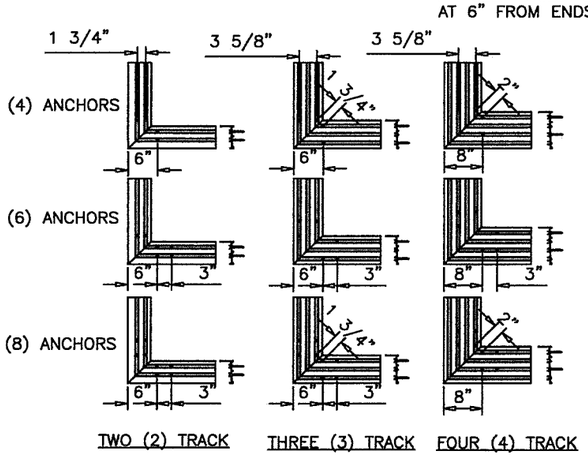

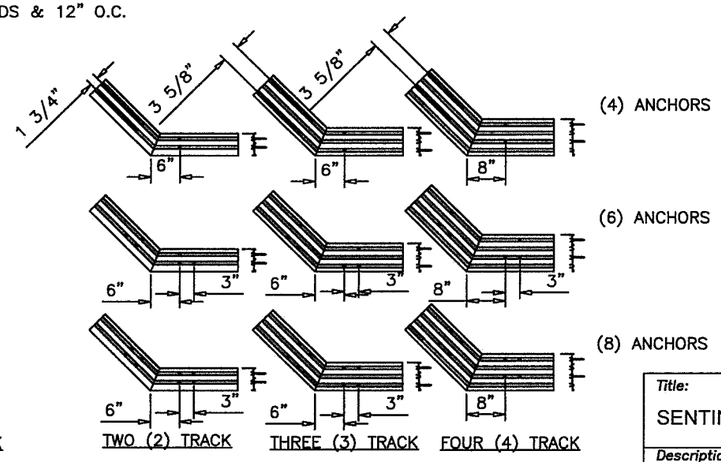

PRODUCT REVISED
as complying with the Florida Building Code
NOA-No. 20-0729.06
Expiration Date: 09/22/2025
By: Ishaq I. Chanda
Miami-Dade Product Control

Title: SENTINEL 150 ALUM SLIDING GLASS DOOR (L.M.I.)			*Drawn By:* AGK		
Description: CORNER DETAILS			*Date:* 5/22/19		
Revision: NO CHANGES THIS SHEET			*Rev. By:* AGK	*Rev. Date:* 7/21/20	
Series/Model: SGD-150 LMI	*Scale:* N.T.S.	*Sheet:* 22 OF 28	*Drawing No.* SGD150LMI-NOA		*Rev:* A

Impact Resistant Windows & Doors
WE'RE STRONGER™
CGI DOORS AND WINDOWS, INC.
3780 W 104TH STREET
HIALEAH, FL 33018
(305) 593-6590

PREPARED BY LYNN MILLER
1070 TECHNOLOGY DRIVE
N. VENICE, FL 34275
(941) 480-1600

REGISTRATION #29296

ANTHONY LYNN MILLER
LICENSE
No. 58705
7/21/20
STATE OF FLORIDA
PROFESSIONAL ENGINEER
A. LYNN MILLER, P.E. P.E.# 58705

TYPICAL PAD PILE INSTALLATION LOCATION

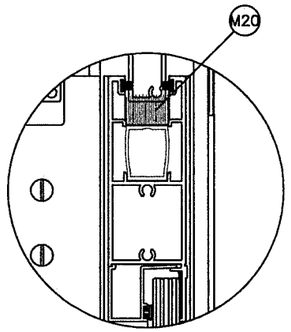

TYPICAL AT PANEL 4 CORNERS

EXTERIOR MOUNTED POCKETED JAMB

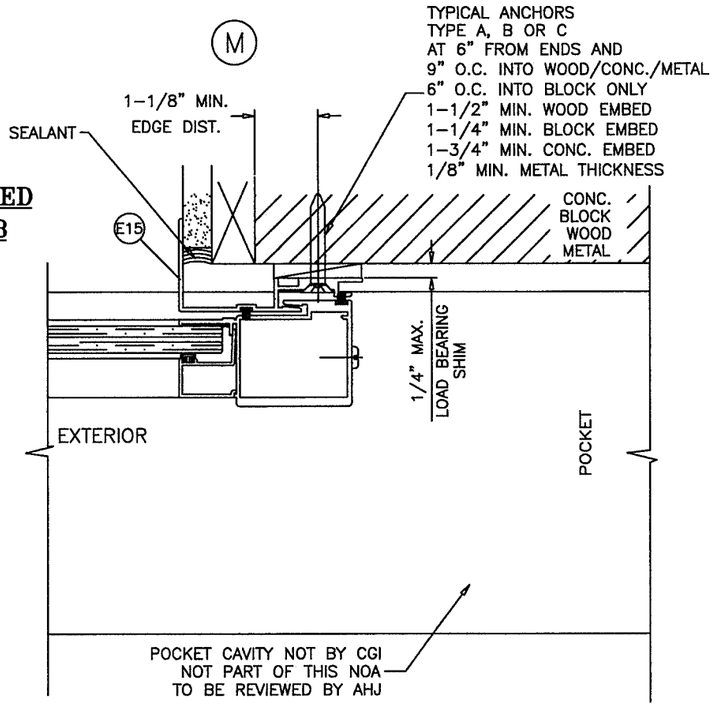

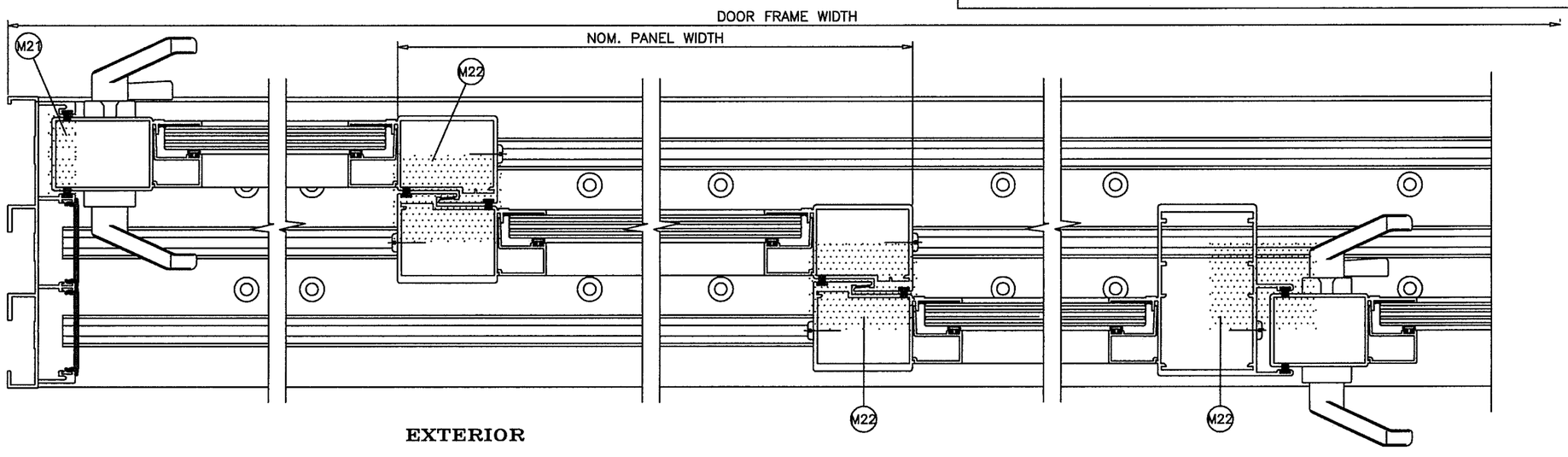

PRODUCT REVISED
as complying with the Florida Building Code
NOA-No. 20-0729.06
Expiration Date: 09/22/2025
By: Ishaq I. Chanda
Miami-Dade Product Control

Title: SENTINEL 150 ALUM SLIDING GLASS DOOR (L.M.I.)			*Drawn By:* AGK		Impact Resistant Windows & Doors WE'RE STRONGER™ CGI DOORS AND WINDOWS, INC. 3780 W 104TH STREET HIALEAH, FL 33018 (305) 593-6590
Description: DETAILS			*Date:* 5/22/19		
Revision: NO CHANGES THIS SHEET			*Rev. By:* AGK	*Rev. Date:* 7/21/20	PREPARED BY LYNN MILLER 1070 TECHNOLOGY DRIVE N. VENICE, FL 34275 (941) 480-1600
Series/Model: SGD-150 LMI	*Scale:* N.T.S.	*Sheet:* 23 OF 28	*Drawing No.* SGD150LMI-NOA	*Rev:* A	REGISTRATION #29296

ANTHONY LYNN MILLER LICENSE No. 58705 STATE OF FLORIDA PROFESSIONAL ENGINEER
7/21/20

A. LYNN MILLER, P.E. P.E.# 58705

CODE	PART No.	DESCRIPTION	MATERIAL	MANUF.	REMARKS
E1	CGI–183	FRAME SILL 2 TRACK	6063–T6	CGI EXTRUDER	–
E2	CGI–151	FRAME JAMB 2 TRACK	6063–T6	CGI EXTRUDER	–
E3	CGI–186	FRAME HEAD 2 TRACK	6063–T6	CGI EXTRUDER	–
E4	CGI–153	EXTERIOR INTERLOCK	6063–T6	CGI EXTRUDER	–
E5	CGI–154	INTERIOR INTERLOCK	6063–T6	CGI EXTRUDER	–
E6	CGI–155	MAIN STILE	6063–T6	CGI EXTRUDER	–
E7	CGI–156	TOP & BOTTOM HORIZ	6063–T6	CGI EXTRUDER	–
E8	CGI–157	SILL RISER	6063–T6	CGI EXTRUDER	–
E8.1	CGI–181	ALT. SILL RISER(OPTIONAL)	6063–T6	CGI EXTRUDER	–
E9	CGI–158	INTERIOR TRACK ASTRAGAL	6063–T6	CGI EXTRUDER	–
E10	CGI–159	INTERLOCK REINFORCING (LENGTH = FRAME HT. – 8")	6063–T6	CGI EXTRUDER	–
E11	CGI–182	FRAME SILL 3 TRACK	6063–T6	CGI EXTRUDER	–
E12	CGI–161	FRAME JAMB 3 TRACK	6063–T6	CGI EXTRUDER	–
E13	CGI–185	FRAME HEAD 3 TRACK	6063–T6	CGI EXTRUDER	–
E14	CGI–168	OUTER TRACK ASTRAGAL	6063–T6	CGI EXTRUDER	–
E15	CGI–170	POCKET HOOK	6063–T6	CGI EXTRUDER	–
E16	CGI–121	7/16" GLASS GLAZING BEAD	6063–T5	CGI EXTRUDER	–
E17	CGI–123	1" GLASS GLAZING BEAD	6063–T5	CGI EXTRUDER	–
E18	CGI–153A	EXTERIOR INTERLOCK (OPTIONAL)	6063–T6	CGI EXTRUDER	–
E19	CGI–154A	INTERIOR INTERLOCK (OPTIONAL)	6063–T6	CGI EXTRUDER	–
E20	CGI–155A	MAIN STILE (OPTIONAL)	6063–T6	CGI EXTRUDER	–
E21	CGI–156A	TOP & BOTTOM HORIZ (OPTIONAL)	6063–T6	CGI EXTRUDER	–
E22	CGI–158A	ASTRAGAL (OPTIONAL)	6063–T6	CGI EXTRUDER	–
E23	CGI–168A	OUTER–TRACK ASTRAGAL (OPTIONAL)	6063–T6	CGI EXTRUDER	–
E24	CGI–180	DECORATIVE SILL COVER (OPTIONAL)	6063–T6	CGI EXTRUDER	–
E25	CGI–184	2, 3 & 4 TRACK FRAME SILL SCREW COVER	6063–T6	CGI EXTRUDER	–
E26	CGI–187	2, 3 & 4 TRACK FRAME HEAD SCREW COVER	6063–T5	CGI EXTRUDER	–
E27	CGI–188	FRAME JAMB SCREW COVER (OPTIONAL)	6063–T5	CGI EXTRUDER	–
E28	CGI–1028	FRAME HEAD 4 TRACK	6063–T6	CGI EXTRUDER	–
E29	CGI–1029	FRAME SILL 4 TRACK	6063–T6	CGI EXTRUDER	–
E30	CGI–1030	FRAME JAMB 4 TRACK	6063–T6	CGI EXTRUDER	–
E31	CGI–1057	FEMALE CORNER ADAPTOR (90°)	6063–T6	CGI EXTRUDER	–
E32	CGI–1058	FEMALE CORNER ADAPTOR (135°)	6063–T6	CGI EXTRUDER	–
E33	CGI–1059	MALE CORNER ADAPTOR	6063–T6	CGI EXTRUDER	–
M1	CGI–382V	GLAZING BULB VINYL (DUROMETER 75–80 SHORE A)	PVC	–	–

CODE	PART No.	DESCRIPTION	MATERIAL	MANUF.	REMARKS
M2	CGI–171C	FIXED PANEL CLIP (2–1/2" LONG)	6063–T5	–	3 @ FIXED PANEL
M3	CGI–173	FIXED PANEL SHIM	NYLON	–	2 PER FIXED PANEL
M10	CGI–176	FRAME HEAD ANTILIFT & PAD PILE	WOOL/NYLON	SULLIVAN	1 PER INTERLOCK/ASTR.
M11	W23201NG	PILE WITH CENTER FIN	WOOL	ULTRAFAB OR EQUIV.	–
M12	–	BOTTOM RAIL STIFFENER, 1" LONG, 2 AT EACH END	ALUMINUM	CGI EXTRUDER	4 PER BOTTOM RAIL
M13	TA–51	ROLLER ASSEMBLY AT PANELS WITHOUT CORNERS	ST/ST	AMESBURY	2 PER OPERABLE PANEL
M13A	1984	ROLLER ASSEMBLY AT CORNER PANELS	ST/ST	AMESBURY	2 PER OPERABLE PANEL
M14	SGD–500	DUAL MORTISE LOCK	ST/ST	SULLIVAN	ATTACHED TO SGD–503
M14A	PS01–0036–117	DUAL MORTISE LOCK	ST/ST	INTERLOCKS	ATTACHED TO M16A
M15	SGD–507	KEEPER	ZINC	SULLIVAN	INST. W/ 2 #10X3/4" PH
M15A	SGD–507N	KEEPER	ZINC	INTERLOCKS	INST. W/ 2 #10X3/4" PH
M16	SGD–503	RECESSED ADAPTOR	ZINC	SULLIVAN	INST. W/ 2 #10X3/4" FH
M16A	PS01–0036–117	RECESSED ADAPTOR	ZINC	INTERLOCKS	INST. W/ 2 #10X3/4" FH
M17	SGD–5500	HANDLE SET	ZINC	SULLIVAN/INTERLOCKS	–
M18	SM2300WH	HANDLE SET OPTIONAL	ZINC	SULLIVAN	–
M19	SCS2000 SILPRUF	SEALANT	SILICONE	GE	–
M20	CGI–177	PANEL TOP & BOTTOM DUST PILE	WOOL/PVC	SULLIVAN OR EQUIV.	4 PER PANEL
M21	WS–202	HEAD AND SILL SMALL PILE PAD	WOOL	ULTRAFAB OR EQUIV.	1 PER INTERLOCK/ASTRAGAL
M22	WS–201	SILL INTERLOCK PILE PAD	WOOL	ULTRAFAB OR EQUIV.	
M23	HD–12–10042	.350" REACH POCKET SEAL	–	AMESBURY	–
S2	–	#10 X 1 1/4" LG. PHL. PH. SMS. ST/ST. ASY. SCREW	–	–	2 OR 3 PER CORNER

SINGLE LOCK: FOR ALL PANELS WITHOUT CORNERS

TWO POINT LOCK BY 'SULLIVAN' OR 'INTERLOCK' LOCATED AT MAIN STILE AT 40" FROM BOTTOM
SS MORTISE LOCK (PART #SGD–500) (PS01–0036–117)
ZINC RECESSED ADAPTOR (PART #SGD–503) (PS01–0036–117)
ZINC HANDLE SET (PART #SM5500) & (PART #SM2300WH)
ZINC KEEPER (PART #SGD–507) (PART #SGD–507N)

DOUBLE LOCKS: REQD. AT 90° AND 135° CORNER PANELS ONLY

TWO POINT LOCKS LOCATED AT MAIN STILE AT 40" AND 78" FROM BOTTOM
SS MORTISE LOCKS WITH RECESSED ADAPTORS (PART #HD–3310141)
SECURED WITH (2) 10–24 X 1/2" FH SCREWS
BOTTOM LOCK ACTIVATES TOP LOCK WITH A MECHANICALLY ATTACHED CONNECTING BAR (PART #HD–3310142)
ZINC HANDLE SET
SECURED WITH (2) 6–32 X 1–1/2" OH MS
STEEL KEEPER (PART #HD–3310143)
SECURED WITH (4) 10–24 X 1/2" PH THREAD FORMING SCREWS

PRODUCT REVISED
as complying with the Florida Building Code
NOA-No. 20-0729.06
Expiration Date: 09/22/2025
By: Ishaq I. Chanda
Miami–Dade Product Control

Title: SENTINEL 150 ALUM SLIDING GLASS DOOR (L.M.I.)			*Drawn By:* AGK		Impact Resistant Windows & Doors WE'RE STRONGER™ CGI DOORS AND WINDOWS, INC. 3780 W 104TH STREET HIALEAH, FL 33018 (305) 593-6590
Description: BILL OF MATERIALS			*Date:* 5/22/19		
Revision: NO CHANGES THIS SHEET			*Rev. By:* AGK	*Rev. Date:* 7/21/20	PREPARED BY LYNN MILLER 1070 TECHNOLOGY DRIVE N. VENICE, FL 34275 (941) 480-1600
Series/Model: SGD-150 LMI	*Scale:* N.T.S.	*Sheet:* 24 OF 28	*Drawing No.* SGD150LMI-NOA	*Rev:* A	REGISTRATION #29296

ANTHONY LYNN MILLER LICENSE No. 58705 STATE OF FLORIDA PROFESSIONAL ENGINEER
7/21/20
A. LYNN MILLER, P.E. P.E.# 58705

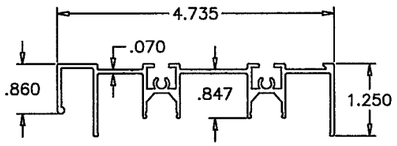

E3 FRAME HEAD (2 TRACK)

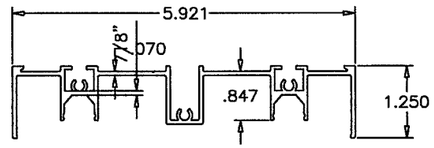

E13 FRAME HEAD (3 TRACK)

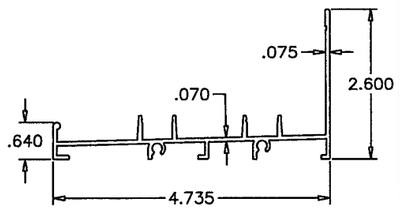

E1 FRAME SILL (2 TRACK)

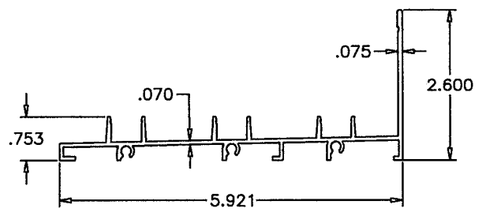

E11 FRAME SILL (3 TRACK)

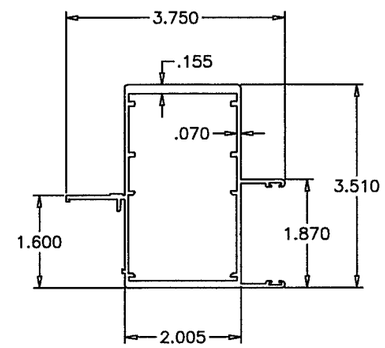

E14 OUTER TRACK ASTRAGAL STILE

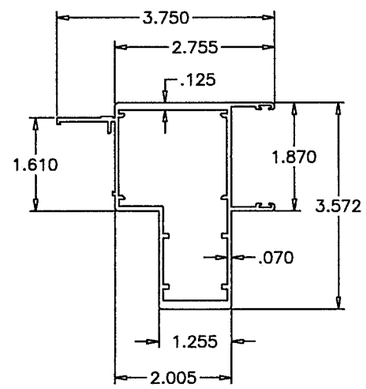

E9 INTERIOR TRACK ASTRAGAL STILE

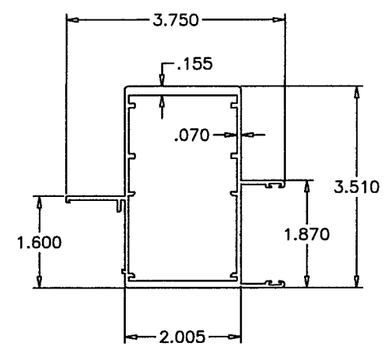

E23 OUTER TRACK ASTRAGAL (OPTIONAL)

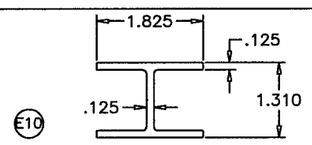

E10 INTERLOCK REINFORCING

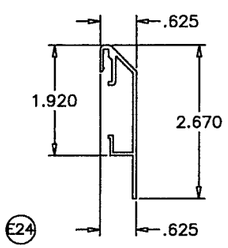

E24 SILL COVER(OPTIONAL)

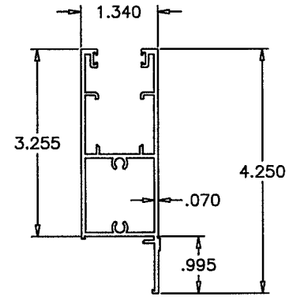

E7 TOP/BOTTOM HORIZ

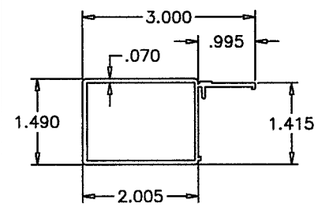

E6 MAIN STILE

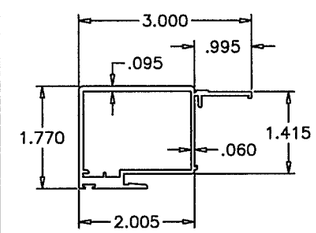

E5 INTERIOR INTERLOCK

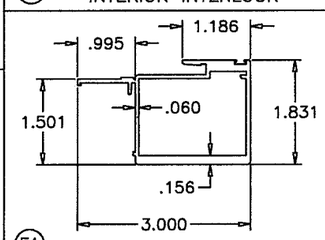

E4 EXTERIOR INTERLOCK

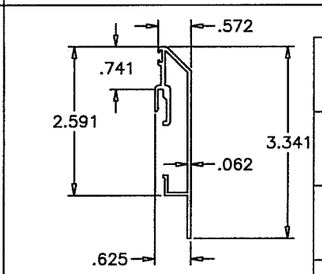

E8.1 SILL RISER (OPTIONAL)

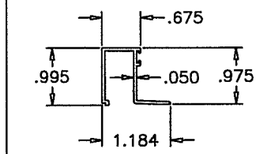

E16 GLAZING BEAD
LAM. GLASS

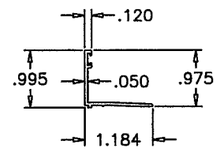

E17 GLAZING BEAD
INSUL. LAM. GLASS

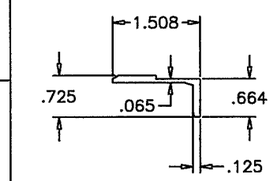

M2 FIX. PANEL CLIP

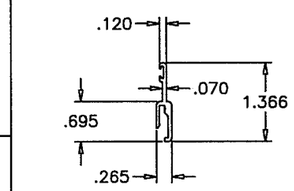

E8 SILL RISER (OPTIONAL)

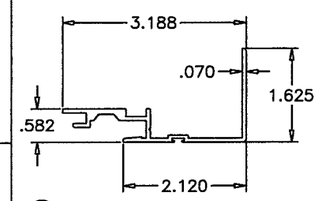

E15 POCKET HOOK

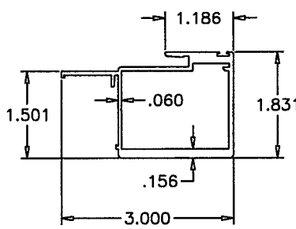

E18 EXTERIOR INTERLOCK (OPTIONAL)

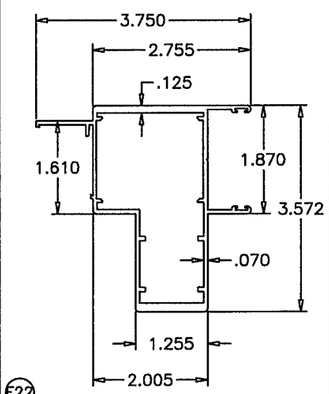

E22 INTERIOR TRACK ASTRAGAL
(OPTIONAL)

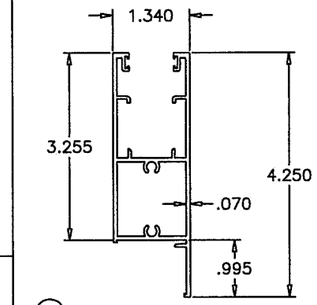

E21 TOP/BOTTOM HORIZ (OPTIONAL)

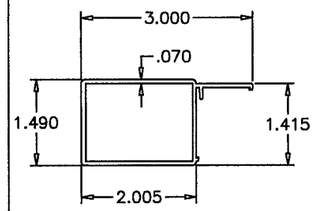

E20 MAIN STILE (OPTIONAL)

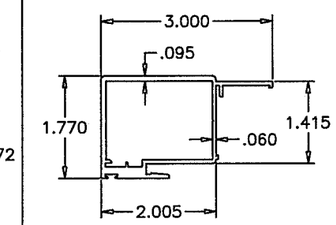

E19 INTERIOR INTERLOCK (OPTIONAL)

PRODUCT REVISED
as complying with the Florida Building Code
NOA-No. 20-0729.06
Expiration Date: 09/22/2025
By: Ishaq I. Chanda
Miami-Dade Product Control

Title: SENTINEL 150 ALUM SLIDING GLASS DOOR (L.M.I.)			*Drawn By:* AGK		
Description: EXTRUSIONS			*Date:* 5/22/19		
Revision: NO CHANGES THIS SHEET			*Rev. By:* AGK	*Rev. Date:* 7/21/20	
Series/Model: SGD-150 LMI	*Scale:* N.T.S.	*Sheet:* 25 OF 28	*Drawing No.* SGD150LMI-NOA		*Rev:* A

Impact Resistant Windows & Doors
WE'RE STRONGER™
CGI DOORS AND WINDOWS, INC.
3780 W 104TH STREET
HIALEAH, FL 33018
(305) 593-6590

PREPARED BY LYNN MILLER
1070 TECHNOLOGY DRIVE
N. VENICE, FL 34275
(941) 480-1600

REGISTRATION #29296

ANTHONY LYNN MILLER
LICENSE
No. 58705
7/21/20
STATE OF FLORIDA
PROFESSIONAL ENGINEER

A. LYNN MILLER, P.E. P.E.# 58705

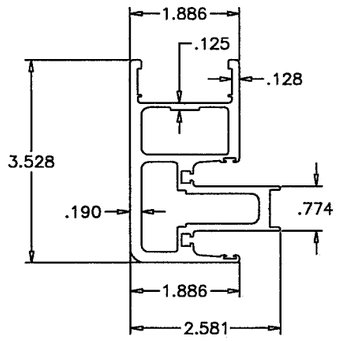

E31 FEMALE CORNER ADAPTOR (90°)

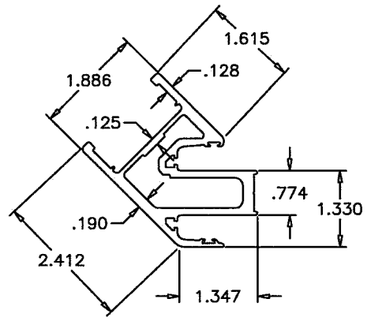

E32 FEMALE CORNER ADAPTOR (135°)

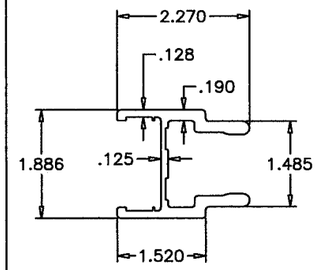

E33 MALE CORNER ADAPTOR

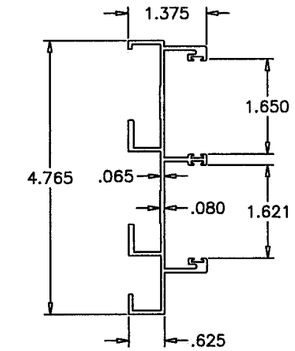

E2 FRAME JAMB (2 TRACK)

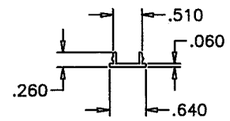

E26 FRAME HEAD COVER

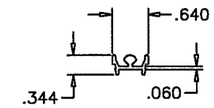

E25 FRAME SILL COVER

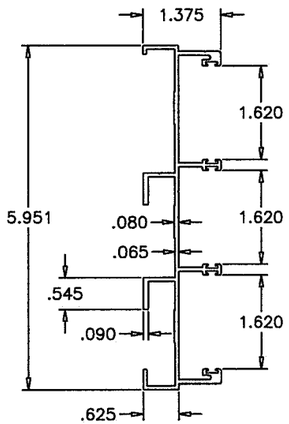

E12 FRAME JAMB (3 TRACK)

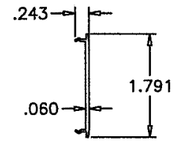

E27 FRAME JAMB COVER

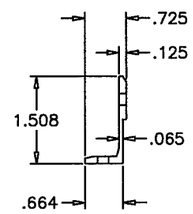

M2 FIXED PANEL CLIP

PRODUCT REVISED
as complying with the Florida Building Code
NOA-No. 20-0729.06
Expiration Date: 09/22/2025
By: Ishaq I. Chanda
Miami-Dade Product Control

Title: SENTINEL 150 ALUM SLIDING GLASS DOOR (L.M.I.)			*Drawn By:* AGK		Impact Resistant Windows & Doors WE'RE STRONGER™ CGI DOORS AND WINDOWS, INC. 3780 W 104TH STREET HIALEAH, FL 33018 (305) 593-6590
Description: EXTRUSIONS			*Date:* 5/22/19		
Revision: NO CHANGES THIS SHEET			*Rev. By:* AGK	*Rev. Date:* 7/21/20	PREPARED BY LYNN MILLER 1070 TECHNOLOGY DRIVE N. VENICE, FL 34275 (941) 480-1600
Series/Model: SGD-150 LMI	*Scale:* N.T.S.	*Sheet:* 26 OF 28	*Drawing No.* SGD150LMI-NOA	*Rev:* A	REGISTRATION #29296

ANTHONY LYNN MILLER LICENSE No. 58705 STATE OF FLORIDA PROFESSIONAL ENGINEER
7/21/20

A. LYNN MILLER, P.E. P.E.# 58705

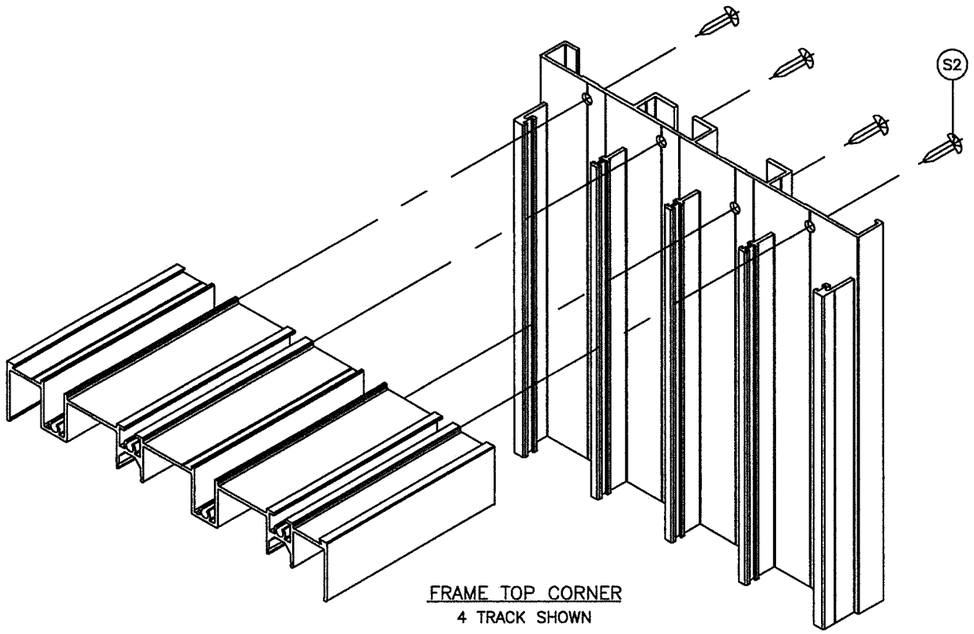

FRAME TOP CORNER
4 TRACK SHOWN

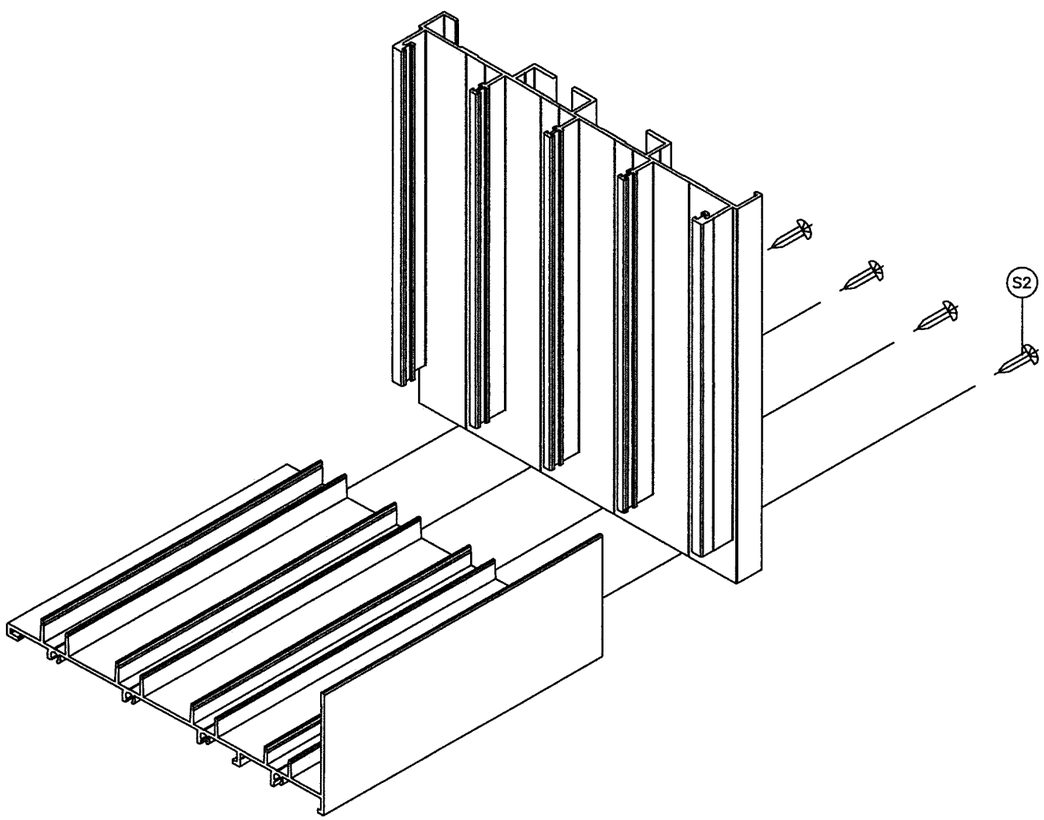

FRAME BOTTOM CORNER
4 TRACK SHOWN

PRODUCT REVISED
as complying with the Florida Building Code
NOA-No. 20-0729.06
Expiration Date: 09/22/2025
By: Ishwar I. Chandra
Miami-Dade Product Control

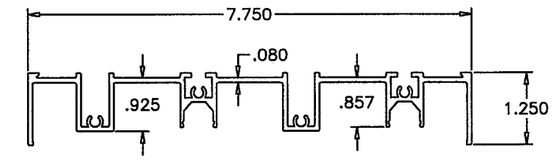

E28 FRAME HEAD (4 TRACK)

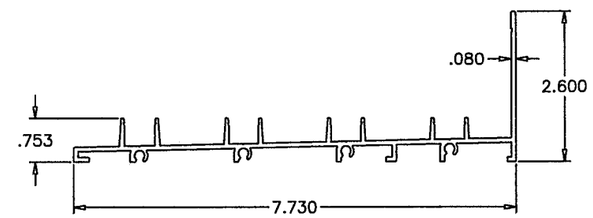

E29 FRAME SILL (4 TRACK)

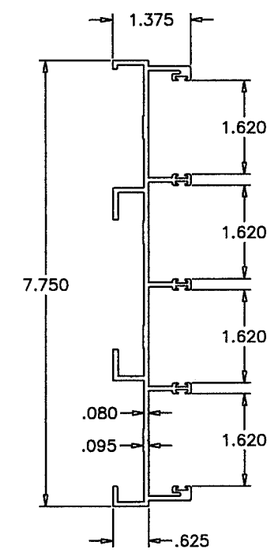

E30 FRAME JAMB (4 TRACK)

Title:	Drawn By:	
SENTINEL 150 ALUM SLIDING GLASS DOOR (L.M.I.)	AGK	
Description:	**Date:**	
INSTALLATION DETAILS, EXTRUSIONS	5/22/19	
Revision:	**Rev. By:**	**Rev. Date:**
NO CHANGES THIS SHEET	AGK	7/21/20

Series/Model:	Scale:	Sheet:	Drawing No.	Rev:
SGD-150 LMI	N.T.S.	27 OF 28	SGD150LMI-NOA	A

Impact Resistant Windows & Doors
WE'RE STRONGER™
CGI DOORS AND WINDOWS, INC.
3780 W 104TH STREET
HIALEAH, FL 33018
(305) 593-6590

PREPARED BY LYNN MILLER
1070 TECHNOLOGY DRIVE
N. VENICE, FL 34275
(941) 480-1600

REGISTRATION #29296

ANTHONY LYNN MILLER
LICENSE
No. 58705
STATE OF FLORIDA
PROFESSIONAL ENGINEER
7/21/20

A. LYNN MILLER, P.E. P.E.# 58705

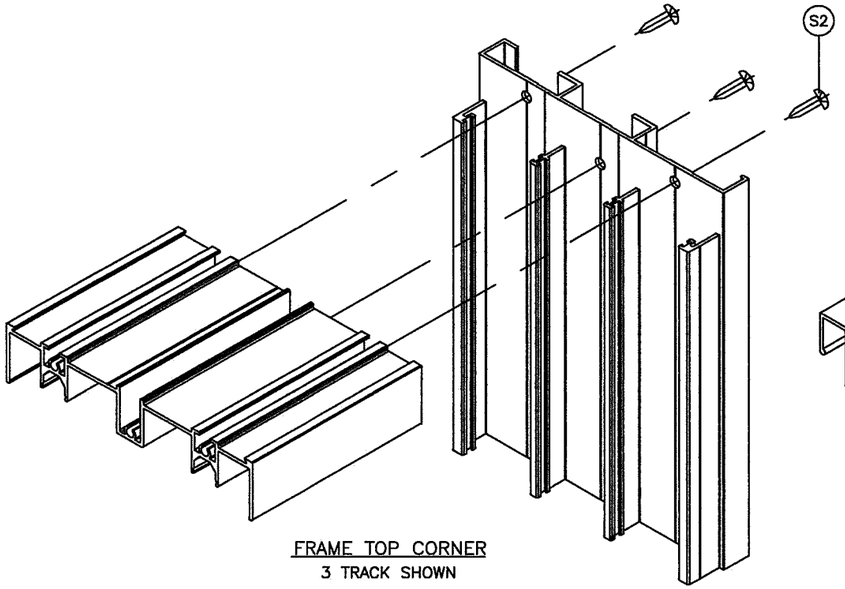

FRAME TOP CORNER
3 TRACK SHOWN

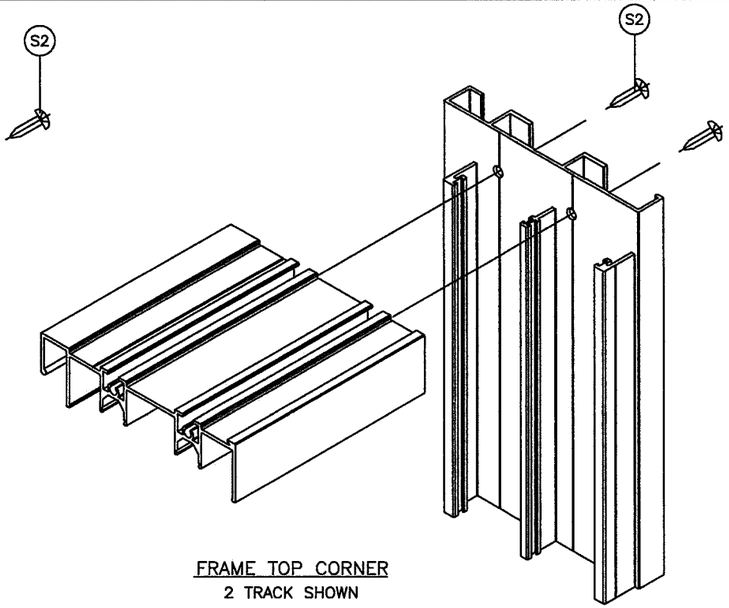

FRAME TOP CORNER
2 TRACK SHOWN

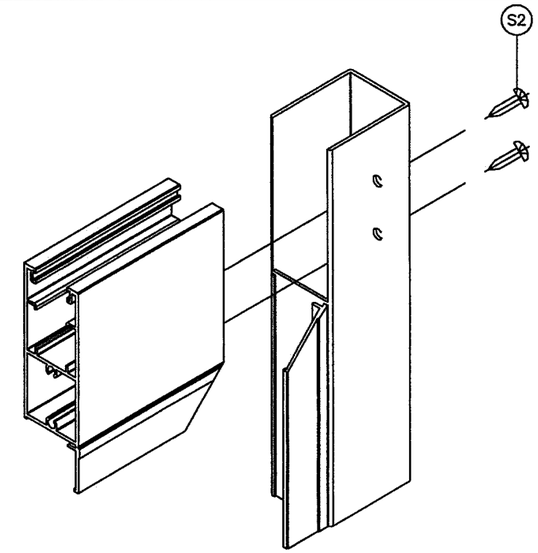

PANEL TOP/BOTTOM CORNER
MITERED BEAD CORNER (TYPICAL)

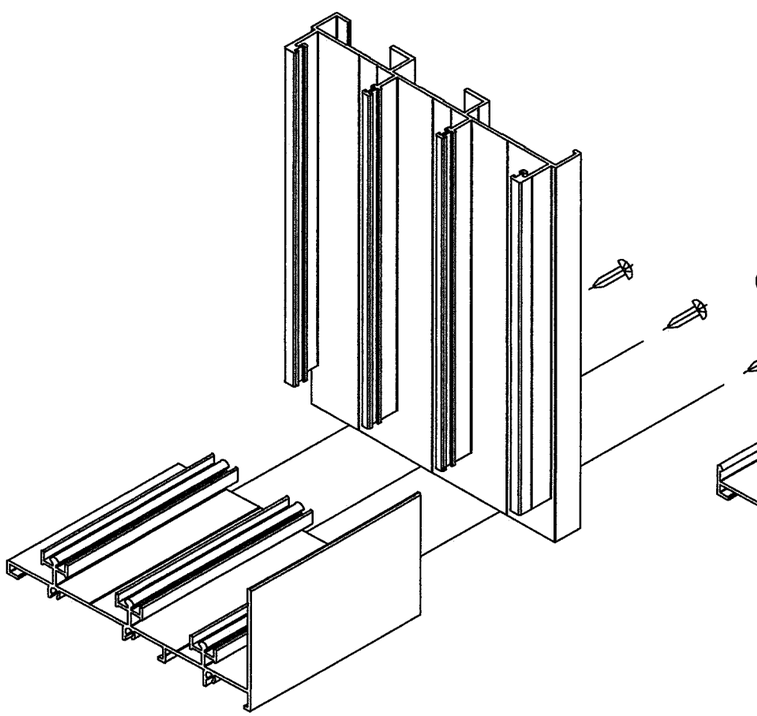

FRAME BOTTOM CORNER
3 TRACK SHOWN

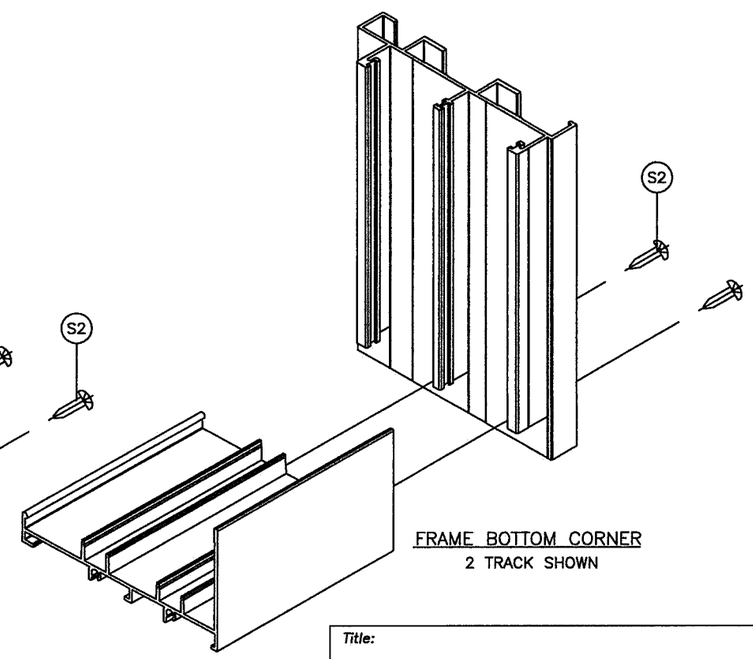

FRAME BOTTOM CORNER
2 TRACK SHOWN

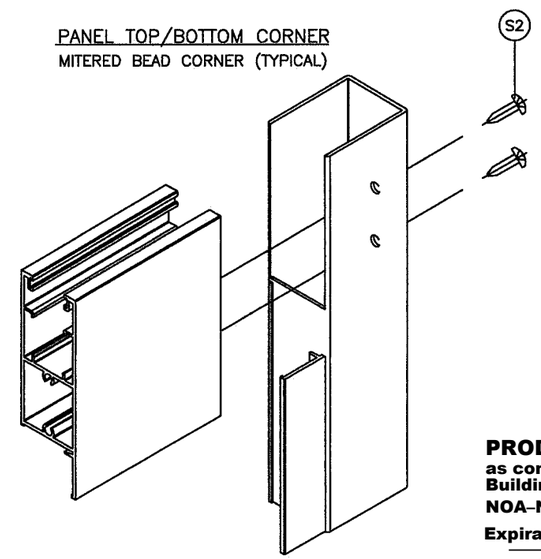

PANEL TOP/BOTTOM CORNER
SQUARE BEAD CORNER (OPTIONAL)

PRODUCT REVISED
as complying with the Florida Building Code
NOA-No. 20-0729.06
Expiration Date: 09/22/2025
By: Ishaq I. Chanda
Miami-Dade Product Control

Title: SENTINEL 150 ALUM SLIDING GLASS DOOR (L.M.I.)			*Drawn By:* AGK		
Description: INSTALLATION DETAILS			*Date:* 5/22/19		
Revision: NO CHANGES THIS SHEET			*Rev. By:* AGK	*Rev. Date:* 7/21/20	
Series/Model: SGD-150 LMI	*Scale:* N.T.S.	*Sheet:* 28 OF 28	*Drawing No.* SGD150LMI-NOA		*Rev:* A

Impact Resistant Windows & Doors
WE'RE STRONGER™
CGI DOORS AND WINDOWS, INC.
3780 W 104TH STREET
HIALEAH, FL 33018
(305) 593-6590

PREPARED BY LYNN MILLER
1070 TECHNOLOGY DRIVE
N. VENICE, FL 34275
(941) 480-1600

REGISTRATION #29296

ANTHONY LYNN MILLER
LICENSE
No. 58705
STATE OF FLORIDA
PROFESSIONAL ENGINEER
7/21/20

A. LYNN MILLER, P.E. P.E.# 58705